PRELIMINARY PRODUCT INFORMATION

Mentrix™ Flex Panel

Touch & Tactile Desktop Panel



Mentrix Flex Panel

Key Features and Benefits

Hybrid Touch & Tactile Keypanel

- 16 Keysets
  - 8 Physical Lever Keys
  - 8 or 16 Rotaries
  - Touch Controls
- Color Touch Display
- Flexible Mounting
  - Desk Stand included
  - VESA Universal Mount

Connectivity - Local

- External Inputs & Outputs
- Logic GPIO
- PoE + Powered

Connectivity - System

- Local Networks - AES67 Capable Networks
- Global Network - I.V. Port
- Direct Connection* - Eclipse MVX

Eclipse Digital Matrix System

- Channel, Group, IFB, Role, Interface, Sort Group, Dynam-EC Key Group, Control, Telephone
- Separate Talk/Listen Key Assignment
- Key Stacking
- Shift Pages
- Hosted IP Direct Ports
- Latin, Cyrillic, Hangul, Kanji, Katakana and Arabic fonts
- Listen Again

Mentrix™ Flex Panel is a versatile touch and desktop panel for the Eclipse® HX Digital Matrix System.

Description

Mentrix Flex is a touch and tactile desktop panel for use with the Eclipse HX Digital Matrix System. Mentrix panels have 16 keysets on a large high brightness touch screen with 8 tactile lever keys and either 8 or 16 rotary controls. Each keyset includes a 10-character label, visual volume bar and lights to display the configuration or status of the capability assigned to the keyset from the host intercom system. Mentrix Series panels are supplied with a desk stand using a standard VESA mount pattern enabling its use with a limitless number of third-party mounting options.

Technical Specifications

Connectors

Headset: 4-pin XLR-M (X4), 5-pin XLR-F (X5), 7-pin XLR-M (X7 – 2 PTT Parallel with GPI 1-2)
Gooseneck Mic: 3-pin Tuchel
Auxiliary Audio: (2) RJ45 (External I/O 1 & 2) AES-72 Type 3M Pinout - 1: In, 2: Out
GPIO: (1) DB9F (2 GPI, 2 GPO)
USB: Type A, C
Analog: (1) RJ45 for Eclipse MVX*
LAN: (2) RJ45
DC Power Connector: KPJX-4S-S

Controls and Indicators

Front Panel
(1) Mic mute Button
(1) Headset/Gooseneck Mic Input Select Button
(1) Touchscreen Button
(1) Main Level Control
(1) Aux Level Control

Rear Panel
(2) LAN RJ45 Link/Activity LEDs

Microphone

Input Type: Dynamic/Electret – Selectable
Microphone Voltage: 5V
Frequency Response: 200Hz to 20kHz ±3dB relative to 1kHz
Impedance (Electret): 1700 Ω +/- 10%
Impedance (Dynamic): 1000 Ω +/- 10%

Headset

Earphone Impedance: >= 32Ω
Output: 75mW into 50Ω @ <1% THD

Loudspeaker

Frequency Response: 200Hz-10kHz +/- 3dB

4-Wire Aux Line Level Interfaces

Electrically balanced input and output

Input:
Nominal Level: 0dBu
Maximum Level: +18dBu
Frequency Response: 30Hz to 22kHz ±3dB
Noise: <-70 dBu RMS
THD: <0.1% @ 1kHz and <0.5% across specified bandwidth
Impedance: >50KΩ

Output:
Nominal Level: 0dBu
Maximum Level: +18dBu
Frequency Response: 30Hz to 22kHz ±3dB
Noise: <-70 dBu RMS
THD: <0.1% @ 1kHz and <0.5% across specified bandwidth
Impedance: <60Ω

*Eclipse features

Mentrix™ Flex Panel

Touch & Tactile Desktop Panel

Technical Specifications

Logic Power Output
To power Logic Inputs
Output: 5V, separate pin
Current (Max): 0.5A

Power Logic Inputs – GPI
See Host System for configuration options
Number of Inputs: 2
Style: Opto-Isolated
Input Voltage Range: 0 - 30V DC or AC
Input Current: >=10mA required

Power Logic Inputs – PTT (-X7 Variant)
See Host System for configuration options
Number of Inputs: 2
Style: Current-Sink
Input Voltage Active: ≤1.0V DC
Input Voltage Inactive: ≥2.0 V DC
Input Voltage (Max): +60 V

Logic Outputs – GPO/Relay
See Host System for configuration options
Number of Outputs: 2
Style: Solid State Relay
Normalized: Open or Closed, separate pins
Switching Voltage (Max): 60V DC
Switching Current (Max): 250mA

Power Delivery
Charging or powering a 3rd-party device when panel is locally powered
USB-A: 2.5W @ 5V DC
USB-C: 15W @ 5V DC, 27W @ 9V DC**

Power
DC Power Input:
Voltage: 12V DC ± 5%
Current (Max): 5A
Power (Max): 60W
BTU (Max): <43 BTU/hr
Input Power Connector: KPJX-4S-S

This unit is powered via DC input using:

AC Adapter - Inline:
Type: PSU-00010 (optional)
Input Voltage Range: 100 - 240V AC
Input Frequency Range: 50 - 60Hz
Input Power Connector: IEC-C14
Output Voltage: 12V DC ± 5%
Output Current (Max): 5A
Output Power (Max): 60W
Output Power Connector: KPPX-4-P
Ground: Protective earth connected to DC return (non-isolated)

PoE+ - Power over Ethernet
IEEE 802.3at - Class 4
PSE: 30.0W DC max @ Power Source Req.
PD: 25.5W DC max @ Powered Device Draw

Mounting
VESA Sockets Center-to-Center: 2.95in (75mm)
VESA Thread Type: M4x10

Environmental
Operating: -4°-113°F (-20°-45°C)
Storage: -22° to 158°F (-30°-70°C)
Humidity: 20-90%, Non-Condensing @ 104°F (40°C)
Vibration: ETSI 300-019-2-7 V3.0.1 class 7M3
Compass Safety: IEC 60945 Section 11

Dimensions
12.8 x 5.7 x 5.5in (WxHxD)
(325 x 145 x 140mm)

Weight
3lbs (1.36kg)

*Eclipse features
**Pending

Mentrix™ Flex Panel

Touch & Tactile Desktop Panel

Network Specifications | Firmware Release

Mentrix Flex Panel include 2 physical LAN connections that are used bridged or separated depending on configuration and network traffic used. Parameters for different traffic types are displayed below.

Administration

For CCM Management

Network Protocols

Ethernet IPv4–Unicast Audio & Control
DHCP–Dynamic IP Addressing
mDNS–Multicast Device Discovery
HTTP–Management
HTTPS–Secured Management

Network Ports

Unicast:
Ports 67, 68 UDP–Dynamic IP Addressing
Port 80 TCP–Web Interface, System Management
Port 443 TCP - Secured Web interface, System Management

Multicast:
Port 5353 UDP–mDNS, Names, Discovery, Pairing

Network Parameters

MAC Address Prefix: 00:0e:98:....

Link-Local Default IP Address Range: 169.254.0.0/16

System Reserved IP Ranges:
10.0.0.0-7 Internal Systems
127.0.0.0/8 Local Host
172.23.0.0/16 Link Group
224 -239.0.0.0/8 Multicast
Above addresses cannot be assigned

Recommended Ethernet Switches:

- Managed Ethernet Switch
- 100/1000 Base-T Ports
- 1000 Base IP Switch Trunks
- QoS Configuration
- Energy Efficient Ethernet bypass option
- IGMP Snooping options

I.V. Port

For system connectivity over LAN/WAN/Internet

Network Protocols

Ethernet IPv4–Unicast Audio & Control
DHCP–Dynamic IP Addressing
Layer 3–IP Routable
DNS–Domain Name Server
IVP-Proprietary intercom Audio and Control
G722-Audio Codec
AES-128-Audio and Control Encryption
Network Connectivity: Ethernet, Wi-Fi, 3G, 4G, LTE (as available on 3rd-party infrastructure)

Network Ports

Unicast:
Ports 67, 68 UDP–Dynamic IP Addressing
Ports 6001 (host system default) TCP-System Management
Ports 6001 (host system default) UDP-IVP Audio Streams

Multicast:
No multicast ports are used for I.V. Ports

Broadcast:
Port 5000 UDP- Keypanel Legacy Discovery Method

Audio

Audio Encoding: G.722 Fixed Wideband 7kHz within 64kbit/s
Frequency Response: 50Hz-7kHz
Silence Suppression: Optional in LAN & WAN modes. Enabled in Internet mode.

Network Parameters

Resource Use:
Eclipse: 1 Port on IPA/IVC card
Bandwidth:
140 kbps to/from
With far-end silence suppression & bi-directional forward error correction

Latency (typ.): ~40 ms per direction using I.V. Port

Package size:
LAN: 8ms
WAN: 24ms
Internet: 40ms

Network Jitter Tolerance: Rx: Selectable
LAN: <=12ms
WAN: <= 120ms
Internet: <=200ms

Forward Error Correction: Enabled in Internet mode

Encryption: AES-128 enabled in WAN & Internet modes

QoS Tags: DSCP=34, Assured Forwarding (AF41)

MAC Address Prefix: 00:0e:98:....

Link-Local Default IP Address Range: 169.254.0.0/16

System Reserved IP Ranges:
10.0.0.0-7 Internal Systems
127.0.0.0/8 Local Host
172.23.0.0/16 Link Group
224 -239.0.0.0/8 Multicast
Above addresses cannot be assigned

Mentrix™ Flex Panel

Touch & Tactile Desktop Panel

Network Specifications | Firmware Release

AES67

For system connectivity over Local high-bandwidth networks

Network Protocols

Ethernet IPv4– Unicast Audio & Control
DHCP–Dynamic IP Addressing
DNS-SD - Service Discovery
mDNS–Multicast Device Discovery
Layer 3 Routable*
HTTP–Management
PCM–Audio
DiffServ–QoS
IGMPv3–Multicast Management for PTP
PTPv2–Synchronization
SAP-Session Announce Protocol
SDP - Session Description Protocol
RTP - Real Time Protocol
RTSP-Real Time Streaming Protocol
SMPTE 2022-7 –Network Redundancy*

Network Ports

Unicast:
Ports 67, 68 UDP–Dynamic IP Addressing
Port 6001 TCP – System Connection
Port 9875 UDP – SAP/SDP advertisement
Port 15000-15525 UDP – Audio Media
Multicast:
IP 224.0. 1.129 Ports 319, 320 – PTP Synchronization
IP 224.0.0.251 Port 5353 UDP – mDNS, Names, Discovery, Pairing

Network Parameters

Bandwidth: ~ 5-9.6 Mbs (max)
Latency (typ.): <10 ms per direction using AES67 Port
Network Jitter Tolerance: < 2ms @ 125µs package size,
< 20ms @ 1ms package size

QoS Tags:
Clock: DSCP=46, Expedited Forwarding (EF)
Media: DSCP=34, Assured Forwarding (AF41)
Management: DSCP=0, Best Effort (DF)

PTP Parameters: (host system configured)
Sync: PTP v2 (IEEE 1588-2) (target offset ±100 ns)
PTP domain: 0
Priority 1: 127
Priority 2: 128
Announce interval: +1 (2s) (1/2s)
Sync Rate: -3 (125ms) (1/8s)

Package Size: 125µs, 1ms (host system configured)
MTU: Jumbo frames ≥ 9000 bytes (recommended)
Media Profile: AES67

IGMP: Snooping Enabled & Querier on Network
Multicast: Enabled
MAC Address Prefix: 00:0e:98:....
Link-Local Default IP Address Range: 169.254.0.0/16

System Reserved IP Ranges:
10.0.0.0-7 Internal Systems
127.0.0.0/8 Local Host
172.23.0.0/16 Link Group
224 -239.0.0.0/8 Multicast
Above addresses cannot be assigned

Further Details: Refer to the AES67 Network Recommendations for further information, for network performance and use on converged networks.

*Eclipse features

Mentrix™ Flex Panel

Touch & Tactile Desktop Panel

Front

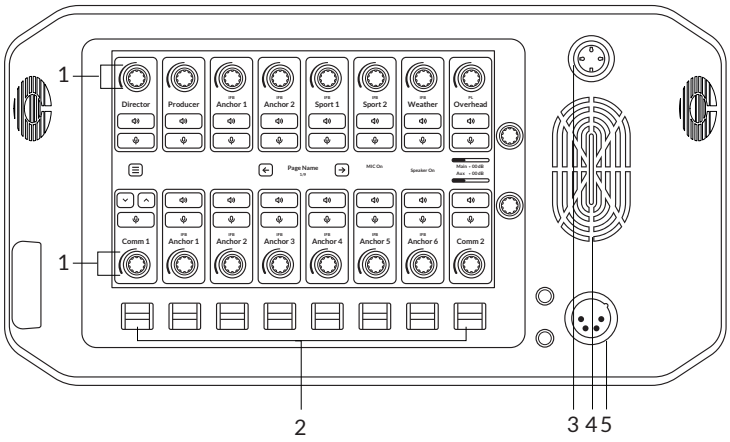

Back

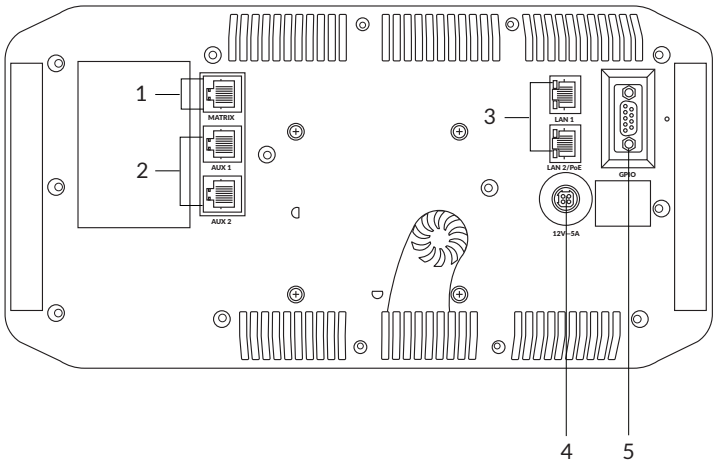

Legend

Front

1. Rotary Knobs
2. Lever Keys
3. Gooseneck Mic
4. Speaker
5. Headset Connector

Back

1. Matrix Port
2. AUX 1/ AUX 2
3. LAN 1/ LAN 2 (PoE)
4. DC Power Connector
5. GPIO

© 2026 Clear-Com LLC. All rights reserved.
Clear-Com, FreeSpeak II, Eclipse HX and the Clear-Com logo are registered trademarks of Clear-Com LLC.

Notice About Specifications While Clear-Com makes every attempt to maintain the accuracy of the information contained in its documentation, that information is subject to change without notice. Performance specifications included in this document are design-center specifications and are included for customer guidance and to facilitate system installation. Actual operating performance may vary.

WARNING: Cancer and Reproductive Harm - **www.P65Warnings.CA.Gov**

Rev: Nov. | 2026