User Guide

# Eclipse® HX-Delta User Guide

A guide to the functions, use and setup of an Eclipse HX-Delta intercom matrix

Part Number: 399G152 Rev A
Date: 6 May 2015

Clear-Com®
AN HME COMPANY

# Document Reference

*Eclipse HX-Delta User Guide*
Part Number: 399G152  Revision: A

## Legal Disclaimers

Copyright © 2015 HME Clear-Com Ltd.
All rights reserved.
Clear-Com, the Clear-Com logo, and Clear-Com Concert are trademarks or registered trademarks of HM Electronics, Inc.
The software described in this document is furnished under a license agreement and may be used only in accordance with the terms of the agreement.
The product described in this document is distributed under licenses restricting its use, copying, distribution, and decompilation / reverse engineering. No part of this document may be reproduced in any form by any means without prior written authorization of Clear-Com, an HME Company.
Clear-Com Offices are located in California, USA; Cambridge, UK; Dubai, UAE; Montreal, Canada; and Beijing, China. Specific addresses and contact information can be found on Clear-Com's corporate website:
www.clearcom.com

## Clear-Com Contacts

### Americas and Asia-Pacific Headquarters
California,  United States
Tel: +1.510.337.6600
Email: CustomerServicesUS@clearcom.com

### Europe, Middle East, and Africa Headquarters
Cambridge, United Kingdom
Tel: +44 1223 815000
Email: SalesSupportEMEA@clearcom.com

### Canada Office
Quebec , Canada
Tel: +1 (450) 653-9669

### China Office
Beijing Representative Office
Beijing, P.R.China
Tel: +8610 65811360/65815577

# Contents

# 1 SAFETY INSTRUCTIONS

1) Read these instructions.

2) Keep these instructions.

3) Heed all warnings.

4) Follow all instructions.

5) Do **not** use this apparatus near water.

6) Clean only with dry cloth.

7) Do **not** block any ventilation openings. Install in accordance with the manufacturer's instructions.

8) Do **not** install near any heat sources such as radiators, heat registers, stoves, or other apparatus (including amplifiers) that produce heat.

9) Do **not** defeat the safety purpose of the polarized or grounding-type plug. A polarized plug has two blades and a third grounding prong. The wide blade or the third prong are provided for your safety. If the provided plug does not fit into your outlet, consult an electrician for replacement of the obsolete outlet.

10) Protect the power cord from being walked on or pinched particularly at plugs, convenience receptacles, and the point where they exit from the apparatus.

11) Only use attachments/accessories specified by the manufacturer.

12) Use only with the cart, stand, tripod, bracket, or table specified by the manufacturer, or sold with the apparatus. When a cart is used, use caution when moving the cart/apparatus combination to avoid injury from tip-over.

13) Unplug this apparatus during lightning storms or when unused for long periods of time.

14) Refer all servicing to qualified service personnel. Servicing is required when the apparatus has been damaged in any way, such as power-cord supply or plug is damaged, liquid has been spilled or objects have fallen into the apparatus, the apparatus has been exposed to rain or moisture, does not operate normally, or has been dropped.

15) **Warning:** To reduce the risk of fire or electric shock, do not expose this product to rain or moisture.

# Safety Symbols

Familiarize yourself with the safety symbols in Figure 1-1. These symbols are displayed on the apparatus and warn you of the potential danger of electric shock if the system is used improperly. They also refer you to important operating and maintenance instructions in the product user manual.

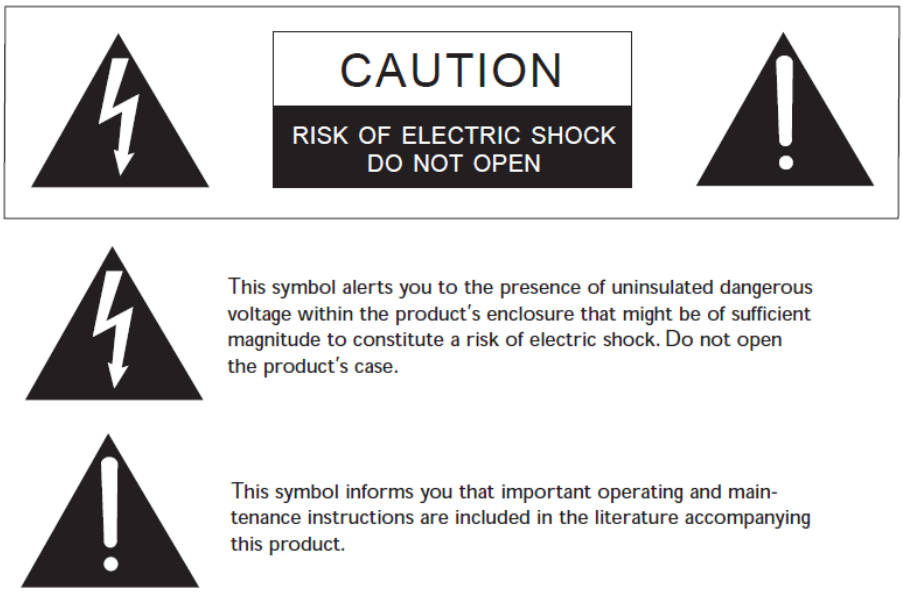


**Figure 1-1 Safety symbols**

# Mains Power Cord

Eclipse HX matrices are powered by an internal power supply. The cord to connect the internal power supply to the mains supply must conform to the following:

- The mains power cord shall have an **IEC C13 connector** at one end and a mains power plug at the other end.
- An **IEC C13 plug** has three pins, the centre pin carrying the earth / ground. The other two pins carry neutral and live circuits.
- The conductors of the mains cords shall have adequate cross-sectional area for rated current consumption of the equipment.
- The mains plug that connects to the mains supply must be approved for use in the country where the equipment is to be used.
- The mains power cord must be an **IEC mains power cord** complying with standard **IEC60320; IEC320/C13**.
- Mains power cords used in the U.S. must also comply with standard **UL817**.

# 2 Introduction

The Eclipse-HX system is a digital point-to-point intercom platform, designed to seamlessly integrate your entire your entire intercom infrastructure (digital, wireless, IP-based and analog intercom systems). The system comprises matrices, interface cards and modules, user panels and interface frames.

At the heart of the system is the central matrix, comprising a matrix and the highly intuitive EHX configuration software, run from an external PC. The **Eclipse HX-Delta User Guide** describes how to use the **Eclipse HX-Delta,** a 3RU matrix with 2 CPU cards, and slots for 4 interface cards and 3 interface modules.

The guide:

- Provides an overview of the Eclipse HX-Delta, including the interface cards that you can fit to the matrix.
- Describes how to install, use and maintain an Eclipse HX-Delta.
- Describes how to use a range of interface cards with the matrix, including the E-FIB, E-MADI64, E-QUE, IVC-32 and LMC-64 interface cards.
- Provides detailed specifications for the Eclipse HX-Delta.

**Note:** For more detailed information about installing an Eclipse HX system, see the **Eclipse HX Matrix Installation Guide.**

For more information about EHX, see your EHX documentation, including ***EHX Help*** (integrated with your software).

*Servicing instructions are for use by qualified personnel only. To reduce the risk of electric shock, do not perform any servicing other than that described by this guide, unless qualified to do so. Refer all servicing to qualified service personnel.*

## 2.1 Further information

For more information about any of the Eclipse HX system components referenced in this guide (including matrices, interface cards, interface modules and EHX configuration software), see the specific manual / documentation for that device or software.

Eclipse HX documentation is available from:

- Your product DVD-ROM.
- The Clear-Com website (*http://www.clearcom.com/product/digital-matrix*).

For sales information, see your Clear-Com sales representative. For contact information, see Page 2 of this guide.

# 3 Overview

This chapter provides an overview of the Eclipse HX-Delta matrix, including the interface cards and modules that can be fitted to the matrix.

## 3.1 Eclipse HX matrices

There are **four** types of Eclipse HX matrix available from Clear-Com:

| Matrix | Description |
|---|---|
| **Eclipse HX-Delta**  | The Eclipse HX-Delta has slots for 2 CPU cards, 4 interface cards and 3 interface modules in a three rack unit (3RU) frame.<br>For more information, see this guide. |
| **Eclipse HX-Median**  | The Eclipse HX-Median has slots for<br>2 CPU cards, 7 interface cards, and 8 interface modules in a six rack unit (6RU) frame.<br>For more information, see the ***Eclipse HX-Median User Guide.*** |
| **Eclipse HX-Omega** 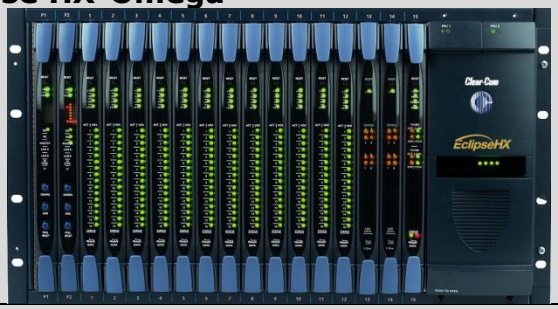 | The largest matrix in the Eclipse HX range.<br>The Eclipse HX-Omega has slots for<br>2 CPU cards and 15 interface cards in a six rack unit (6RU) frame.<br>For more information, see the ***Eclipse HX-Omega User Guide***. |
| **Eclipse HX-PiCo** 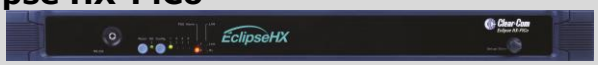 | The Eclipse HX-PiCo provides up to 32 panel and 4 additional four-wire ports in a one rack unit (1RU).<br>For more information, see the ***Eclipse HX-PiCo User Guide.*** |

**Table 1: Eclipse HX Matrices**

## 3.2 Eclipse HX-Delta

A complete Eclipse HX-Delta system consists of a central matrix and the remote audio devices (which may include user panels, interface cards, interface modules, four-wire devices and systems) connected to it.

**Note:** The term **central matrix** is used to differentiate the core hardware and software from the connected user panels and interfaces. The central matrix itself consists of the matrix hardware (the Eclipse HX-Delta matrix) and the EHX configuration software.

### 3.2.1 Chassis and assembly

The **matrix chassis** is a metal rectangular box which measures three rack units (6RU) high and 19-inches wide (13.45 cm x 48.3 cm). The Eclipse HX-Delta has:

- 2 CPU cards.
- Slots for 4 interface cards, and 3 interface modules.
- 2 12V external power supplies (for redundancy).
- 2 internal cooling fans (for redundancy).
- Rear to front Ethernet / panel feed through.
- Front handles for easier removal from the rack.

RJ-45 and fiber-optic connectors are located on removable plates on the rear of the chassis. These connect the interface cards and modules to user panels, four-wire audio equipment, wireless equipment, and other intercom devices.

### 3.2.2 Eclipse HX-Delta front panel

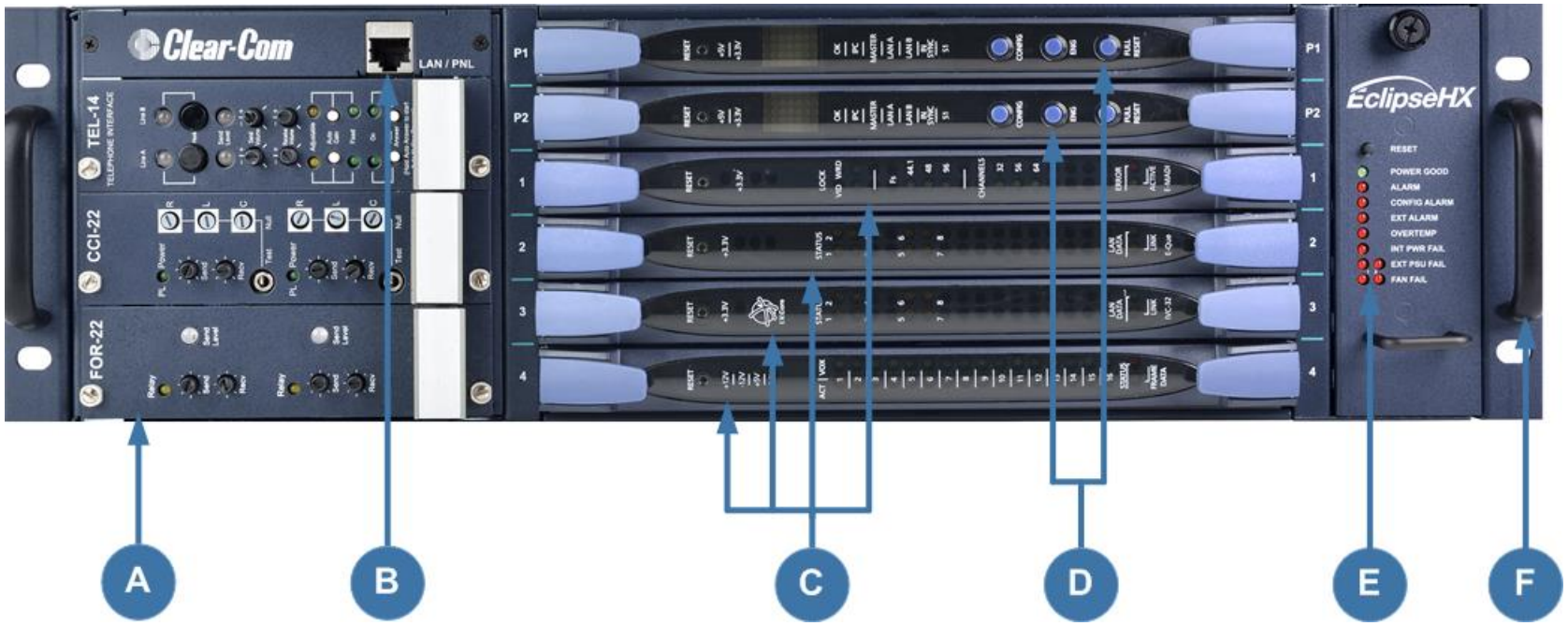


**Figure 3-1 EHX Delta front panel**

| Key: Eclipse HX-Delta front panel | |
|---|---|
| **Feature** | **Description** |
| A | **Interface modules.** The Eclipse HX-Delta can house up to 3 interface modules. Blank panels can be installed to unused slots.<br>For more information, see **3.4 Interface modules.** |
| B | **LAN / PNL connector.** Front to rear Ethernet / panel feed through |
| C | **Interface cards**. Up to 4 interface cards can be installed to the matrix. Blank panels can be installed to unused slots.<br>For more information, see **3.3 Interface cards.** |
| D | **CPU cards (P1 and P2)**. Two CPU cards are fitted to each Eclipse HX-Delta system, in a master and slave relationship.<br>The second CPU card provides redundancy in the case of outages or planned maintenance. Only one rear-panel CPU card is required.<br>For more information, see **3.2.6 CPU card.** |
| E | **Power status and alarm lights**<br>A range of power status and alarm lights are displayed on the front of the matrix. An **alarm reset button** (pressed using a pin) is located above the power status and alarm lights.<br>Under normal operating conditions, the **red** alarm lights remain off, while the **green** power supply lights stay on continuously.<br>The status and alarm lights comprise the following:<br>• **Power status light [Power Good]**. When lit, this **green** status light indicates that the matrix is receiving power from at least one of the two external 12V power supplies.<br>• **Main alarm light [Alarm]**. An alarm source triggers the **red** main alarm light and also one of the additional, specific **red** alarm lights, allowing you to identify or correct alarm conditions before they affect the operation of the matrix.<br>• **CPU card alarm light [Config Alarm]**. When lit, this **red** alarm light indicates a CPU card failure. An audible alarm is given simultaneously.<br>• **External alarm light [Ext Alarm]**. When lit, the **red** external alarm light indicates that an external alarm condition is present.<br>• .The external alarm is connected to the matrix through the 9-pin D-type connector on the matrix's rear panel labeled **Alarm I/O**.<br>• **Temperature warning light [Overtemp]**. When lit, this **red** warning light indicates that the matrix is above the maximum operational temperature limit and is in danger of overheating. |

| | |
|---|---|
| | • **Internal PSU failure light [Int PSU Fail]**. When lit, this **red** warning light indicates that the internal power supply has failed.<br><br>• **External PSU failure lights [Ext PSU Fail (1/2)]**. There are two external PSU failure lights, one for each of the twin external 12V power supplies. When lit, the **red** warning light indicates that the external power supply has failed. If both lights are lit, both the power supplies have failed.<br><br>• **Fan failure lights [Fan Fail (1/2)]**. There are two cooling fan failure lights, one for each of the two cooling fans in the matrix. When lit, the **red** warning light indicates that a fan has failed. If both lights are lit, both the fans have failed.<br><br>For more information, see ***5.7 Power status and alarm lights***. |
| F | **Handle.** There are handles on either side of the matrix to facilitate placing and removing the Eclipse HX-Delta in the 19” rack. |

**Table 2: Key to Eclipse HX-Delta front panel**

### 3.2.3 Eclipse HX-Delta rear panel

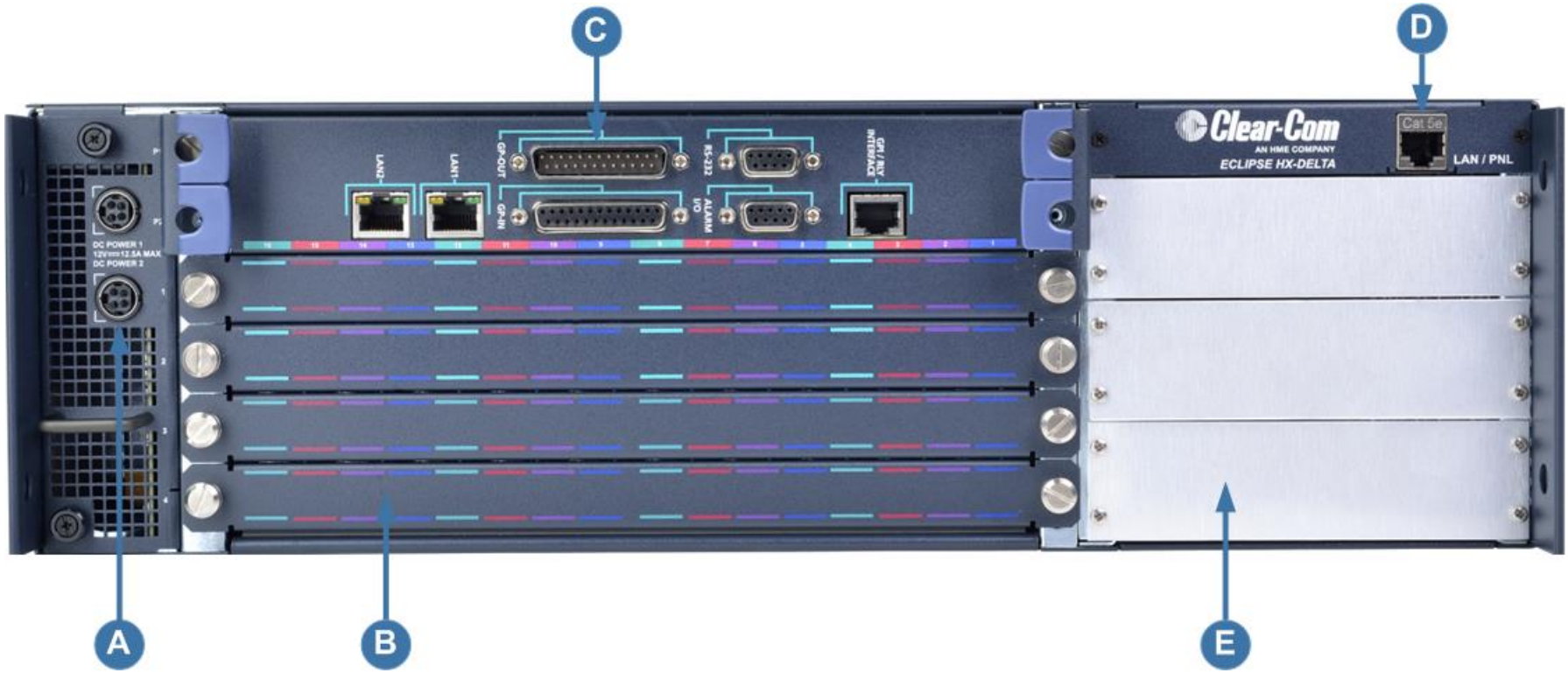


**Figure 3-2 Eclipse HX-Delta rear panel**

| Key: Eclipse HX-Delta rear panel | |
|---|---|
| **Feature** | **Description** |
| A | **DC power supply connectors.** For more information about the 12V external power supplies, see **3.2.4 Power supplies**. |
| B | **Spare slots for interface card rear connector panels.** All front installed interface cards require a corresponding rear connector panel. Blank panels can be installed to unused slots.<br>The Eclipse HX-Delta has 4 slots available for interface cards. For more information, see **3.3 Interface cards**. |
| C | **CPU card rear panel.** The CPU card rear panel houses connectors for an external PC, network, interfaces, alarms and other matrices. Up to 2 CPU cards can be installed to the matrix, but only one rear-panel CPU card is required. Whichever of the two front-installed CPU cards is acting as master will work in conjunction with this card. For more information, see **3.2.6 CPU card.** |
| D | **LAN / PNL connector.** Rear to front Ethernet / panel feed through |
| E | **Interface module slots.** The Eclipse HX-Delta has 3 built-in interface module slots. For more information, see **3.4.Interface modules** |

**Table 3: Key: Eclipse HX-Delta rear panel**

### 3.2.4 Power supplies

The Eclipse HX-Delta matrix has two external 12V power supplies for redundant operation. One power supply unit can power an entire matrix. The second unit provides a backup in case of failure or damage to the first unit.
The two external supplies have separate IEC connectors to AC mains, and are designed for completely automatic and transparent changeover between supplies in the event of a power outage in one of the AC mains circuits.
Each power supply has an input voltage between 100-240 VAC, 50-60Hz.

### 3.2.5 Main features of the Eclipse HX-Delta

Features of the Eclipse HX-Delta matrix system include:

| Feature | Description |
|---|---|
| **Chassis / matrix** | 3RU metal frame, with handles to expedite placement in the rack. |
| **Broadcast audio quality** | Full audio bandwidth throughout the signal chain, producing superior broadcast audio quality. The system maintains 24-bit depth, a sampling rate of 48kHz, and 30 Hz to 22 kHz frequency response. |
| **Interface cards** | Support for 4 interface cards, including MVX-A16, E-FIB, E-MADI64, IVC-32, LMC-64, E-QUE cards.<br>For more information, see .**3.3 Interface cards**. |

| | |
|---|---|
| **Interface modules** | Support for 3 interface modules (used to connect the matrix to telephones, two-way radios, camera intercoms, partylines, and other intercom devices).<br>For more information, see **3.4.Interface modules**. |
| **Redundancy** | Fail-safe redundancy is achieved with two CPU cards and two external power supplies.<br>Note: *Power supplies automatically switch to the correct voltage, for compatibility around the world.* |
| **GPIs / GPOs** | Eight general purpose inputs and eight relays, located directly on the matrix. |
| **User panels** | Full compatibility with V-Series and I-Series user panels. |
| **VOX** | The VOX-programmable audio visually cues you at the matrix when audio transmits at a programmed threshold on a connected user panel or interface. |
| **EHX configuration software** | EHX provides an intuitive and visual way to configure the Eclipse HX matrix system. The Eclipse HX-Delta can store up to four system configurations. |

**Table 4: Eclipse HX-Delta features**

**Note:** The number of interface cards that can be fitted to the matrix is limited by port count. For more information, see **4.4.3 Combining interface cards in the matrix** in this document.

### 3.2.6 CPU card

Two CPU cards are fitted to each Eclipse HX-Delta, in a master and slave relationship. The second CPU card provides redundancy in the case of outages or planned maintenance.
The master CPU card:

- Provides the serial data and Ethernet connection to the connected EHX PC.
- Coordinates the data flow between the other interface cards and modules in the system, allowing them to communicate with each other.
- Stores up to four complete configurations, enabling the selection and activation of a configuration directly from the card.
- Includes an additional, embedded configuration, which may be activated from the card for fast fault checking after the installation or upgrade of the Eclipse HX system.

**Note:** A configuration determines the operating parameters of the Eclipse HX matrix system, including port functions, talk-and-listen audio routes, controls and other functions. Configurations are created and managed in EHX, for download to the

matrices. For more information about EHX, see **3.5 EHX configuration software** in this document.

**Note:** The cards slide vertically into the front of the matrix and connect to the backplane.

# 3.3 Interface cards

You can fit 4 interface cards to the Eclipse HX-Delta.

The number of different types of interface card you can fit to the matrix is limited by the available port count (496 audio ports). For more information, see **4.4.3 Combining interface cards in the matrix** in this document.

Interface cards slide vertically into the front of the matrix and connect to the backplane.

**Note:** The term **central matrix** is used to differentiate the core hardware and software from the connected intercom panels and interfaces. The central matrix itself consists of the matrix hardware (in this case, the Eclipse HX-Delta) and the EHX configuration software.

**Note:** For detailed information about installing interface cards, see **4.4 Installing interface cards**.

## 3.3.1 MVX-A16 analog interface card

An MVX-A16 analog port card controls the operation of panels and interfaces connected to it. User panels and interfaces connect to the port card through an RJ-45 connector (port) on the rear panel. Shielded CAT5 cable attaches the panel or interface to the RJ-45 connector.
The MVX-A16 analog port card sends balanced audio and RS-422 data signals to connected audio equipment through 4-pair shielded CAT5 cable. The card connects up to 16 audio devices (such as user panels, interfaces, or four-wire audio equipment) to the central matrix.
Each audio device connected to an analog port card communicates with all other audio devices in the system and with the central matrix.

### 3.3.1.1 Intelligent linking

For intelligent linking, shielded CAT5 cable is run from a port on one Eclipse HX-Delta matrix to a port on a second Eclipse HX-Delta matrix to form a trunkline connection.

## 3.3.2 E-FIB fiber interface card

E-FIB fiber interfaces connect Eclipse HX matrices together to provide a high speed, dual redundant link to transfer audio samples and data between systems. These connections can be configured to provide protection against the loss of a link or a node.
Each E-FIB fiber interface card set comprises:

- A front card with various status indicators.
- A rear card with two Duplex LC Terminated fiber optic connectors (**TXVRA** and **TXVRB**).

### 3.3.3 E-QUE interface card (for FreeSpeak®/CellCom® and FreeSpeak II™ connections and E1 / T1 trunk lines)

The E-QUE interface card allows the Eclipse HX-Delta to connect to FreeSpeak/CellCom/FreeSpeak II antennas, FreeSpeak/CellCom/ FreeSpeak II antenna splitters, and E1 and T1 trunk lines.
Each E-QUE interface card set comprises:

- A front card with a reset button and various status indicators.
- A rear card with eleven RJ-45 ports giving eight standard Ethernet ports, DECT sync in and out and a LAN port for diagnostic use.

Each E-QUE front card has status LEDs for power, port activity and LAN status. The port activity LEDs show when

- A device is connected to an E1 port.
- A connection has been established between the E1 port and the connected device.

### 3.3.4 E-MADI64 MADI interface card

The E-MADI64 is a MADI (*Multichannel Audio Digital Interface*) card, providing up to 64 duplex channels of AES3 digital audio over a coaxial cable or fiber pair between compatible devices.

**Note:** You have the option in EHX to limit the E-MADI64 card to either 32, 56 or 64 channels of audio. All MADI channels have standard EHX settings, including VOX and in-use tally.

The E-MADI64 card supports up to 32 V-Series Panels over a suitable infrastructure. See 6.5 V-Series Panels on E-MADI (Multi-channel Audio Digital Interface) for more information

Each E-MADI64 card set comprises:

- A front card with pin reset and various status indicators (including channel quantity, sample rate, power and diagnostic (active and error) indicators).
- A rear card with a MADI fiber connector, MADI input and output coaxial cable connectors, and coaxial Video black and burst / Tri Level HD / Word clock sync input.

See also **6 E-MADI64 card** for more information

### 3.3.5 IVC-32 IP interface card

The IVC-32 interface allows the Eclipse HX matrix to connect to IP enabled V-Series panels, other matrices and Concert users using an IP network.
Each IVC-32 interface comprises:

- A front card with a reset button and various status indicators.

- A rear card with eleven RJ-45 ports giving eight E1/T1 ports (not used), DECT sync in and out (not used) and a LAN port for IP connectivity.

Each IVC-32 front card has status LEDs for power, port activity and LAN status. The LAN indicators show whether there is a LAN connection and the IP activity on the LAN port.

#### 3.3.5.1 IVC-32 Redundant Card

You can add an IVC-32 Redundant Card that provides fail-over redundancy for one or more IVC-32 Cards in the matrix.
An IVC-32 Card will fail-over to the IVC-32 Redundant Card under the following conditions:

- •All configured VoIP ports are unconnected for longer than 90 seconds.
- • The IVC-32 Card is detected as absent from the VME backplane.
- • It is requested via the EHX Event Log.

A switch back from a redundant card back to a failed card only occurs under the following condition:

- The redundant card has failed. If the original card is still in error, then it will switch back and forward until corrective action is taken.

### 3.3.6 LMC-64 metering card

The LMC-64 interface allows the Eclipse HX-Delta to provide Production Maestro Pro (routing software) clients with audio level metering of partylines (conferences) and four-wire ports over an IP network. The card supports both direct and trunk connections.
Each LMC-64 interface comprises:

- A front card with a reset button and various status indicators.
- A rear card with eleven RJ-45 ports giving eight E1/T1 ports (not used), DECT sync in and out (not used) and a LAN port for IP connectivity.

Each LMC-64 front card has status LEDs for power, port activity and LAN status. The LAN indicators show whether there is a LAN connection and the IP activity on the LAN port.

## 3.4 Interface modules

Interface modules convert the four-wire signals of a central matrix port to other types of signals that communicate with devices such as telephones, camera intercoms, two-way radios, and so on. In this way non-four-wire devices can communicate with the central matrix.
Each interface module has hardware connectors to connect to both the central matrix and the external device that communicates with the central matrix.
Most interface modules connect to the central matrix via shielded CAT5 cable terminated with RJ-45 connectors.

**Note:** The type of cable used to connect the interface module to the non-four-wire device varies with the device. For more information, see the dedicated user guide / manual for that interface module.

The following interface modules are compatible with the Eclipse HX-Delta matrix:

- TEL-14 telephone interface module.
- CCI-22 dual party-line interface module.
- FOR-22 four-wire interface.
- GPI-6 general purpose inputs interface module.
- RLY-6 relay (general-purpose outputs) interface module.
- AES-6 digital interface module used with V-Series panels fitted with the AES-3 option card. It may also be used with AES-3 compliant third party equipment.

**Note:** Additional interface modules may be added to the Eclipse HX-Delta, using separate interface module frames such as the IMF-3 and IMF-102. For more information, see the dedicated user guide / manual for that particular interface frame.

**Note:** DIG-2 interface modules are not compatible with the Eclipse HX-Delta.

## 3.5 EHX configuration software

The Eclipse HX (EHX) configuration software controls the operation of the connected audio devices by sending signals to the circuit cards in the matrix, which then relay the signals to the audio devices.
**Configurations** (the operating parameters of complete system setups) are usually created on the EHX computer.
Up to four complete system configurations can be stored in the CPU card of the Eclipse
HX-Delta, for retrieval and activation when required. The external PC that hosts the EHX software can store an almost unlimited number of complete system configurations (the number is only limited by the available memory space on the PC). You can download the configurations to the Eclipse HX-Delta as required.
EHX 8.0 runs on the following versions of Windows:

- Microsoft Windows 7 (32-bit and 64-bit).
- Microsoft Windows 8.1 (32-bit and 64-bit)
- Microsoft Windows Server 2008 SP2 (32-bit and 64-bit).
- Microsoft Windows Server 2008 R2 (64-bit).

**Note:** Operation on other platforms is no longer supported.

- When running EHX on Windows OS, you can run the client and server on separate machines, connected over the network.

When running EHX on Windows operating systems, the client and server can run on separate machines connected over a network. You can use EHX to perform a wide range of configuration tasks, including:

- Assigning labels (names) to ports and user panels.
- Creating point-to-point and fixed group (partyline) communications between connected audio devices.
- Enabling, limiting or disabling features of any connected user panel or card.
- Configuring connections between matrices.

**Note:** The above list is not definitive. For more information about the capabilities of EHX, see **EHX Help**.

The EHX system can be set up to run on a client/server model over a network, allowing the system administrator to control multiple matrices remotely.

## 3.6 User panels

The following Clear-Com user panels are compatible with the Eclipse HX-Delta:

- V-Series panels, including expansion panels.
- I-Series panels, including expansion panels.

**Note:** For more information about installing, using and maintaining user panels, and connecting user panels to the matrix, see either:

- The V-Series Panels User Guide.
- The I-Series Panels User Guide.

# 4 Installing the Eclipse HX-Delta

This chapter describes how to install the Eclipse HX-Delta, including the power supplies, CPU cards, interface cards and modules.

## 4.1 Before you begin the installation

### 4.1.1 Check the shipment

When the Eclipse HX-Delta is received, inspect the boxes for shipping damage. Report any shipping damage to the carrier.
Check that every item on the packing list has been received. Save all packing materials in the event that any items need to be returned.

**Note:** The Eclipse HX distributor is **not** responsible for shipping damage.

### 4.1.2 Unpacking the System

When the Eclipse HX-Delta system is received the CPU cards and interface cards, power supplies, and rear-connector panels are **pre-installed** in the matrix chassis.
The customer must supply:

- The standard 19-inch rack in which to install the matrix.
- A personal computer to run the EHX configuration software

  **Note:** See ***13.24 Minimum PC requirements (for EHX software)*** and ***13.25 Recommended PC requirements (for EHX software)*** respectively.

- CAT5 cables (to connect the matrix to user panels, interface modules, and other devices). Clear-Com recommends shielded cables.

### 4.1.3 Reconnecting the CPU card backup battery

***Important:*** *Before the Eclipse HX-Delta is installed, the CPU card's backup battery **must** be reconnected. The matrix will operate if the battery is not reconnected. However, if the matrix is powered down, all run time information (dynamic assignments, crosspoint states and levels) **will be lost**.*

The CPU card has a lithium backup battery that powers the CPU memory if the AC electricity fails. This backup battery is shipped disconnected to preserve battery life.

***Observe anti-static procedures.*** *The CPU card can be damaged by static electricity. Personnel reconnecting the battery should ensure that they ground themselves and all tools before touching cards.*

To reconnect the CPU card's backup battery:

1) Locate the three pins under the **CON9** heading. A jumper plug is placed over pins 2 and 3. This is the **OFF** position.

   **Note:** **CON9** is located at the top of the CPU card, about half way between the front and back of the card.

2) Lift the jumper plug off the pins, and place it over pins 1 and 2. This is the **ON** position.

3) The battery is now powered.

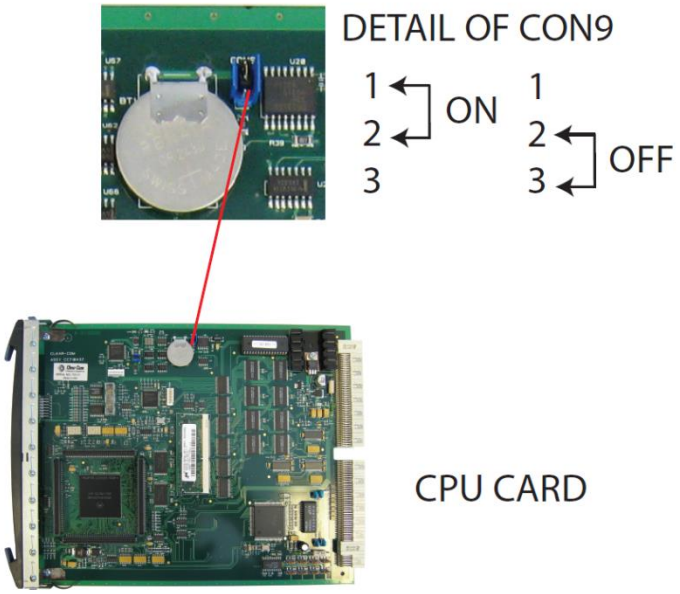


**Figure 4-1: CPU card with detail of CON9 jumper plugs**

Eclipse HX-Delta CPU cards are fitted with a socketed battery, normally a Renata CR2477N with a capacity of 950mAh and a life of approximately 247 days. These socketed batteries are easily replaced and this operation does **not** have to be carried out by service personnel.

#### 4.1.3.1 Disconnecting the CPU backup battery

Before performing any service on the CPU card, the backup battery must be disconnected. To do so, place the **CON9** jumpers in the **OFF** position as described in the previous procedure.

| Pin | Status |
|---|---|
| **1** | On |

| | |
|---|---|
| **2** | Common |
| **3** | Off |

**Table 5: CON9 Pin configuration**

If the matrix is going to be stored for more than 3 months, the CPU backup battery needs to be temporarily deactivated while the matrix is stored.
To do so, put the **CON9** jumper in the **OFF** position as described above. In order to power up and start operating the matrix, reconnect the CPU backup battery by placing the **CON9** jumper in the **ON** position, as described above.

**Note:** Battery deactivation should be carried out by qualified service personnel.

#### 4.1.3.2 Low power warning

If the CPU card is left unpowered for a period of time the batteries for the battery backed up RAM may become discharged. This results in the run time information being lost.
If this state is detected by the CPU card then the CPU card will provide signalization in the form of 2 rapid flashes followed by a slow flash of the **OK LED**. If EHX is logging, then the following message will appear in the log.

**Non Volatile Data is invalid - Please check Battery Voltage**

If on successive power downs of the Eclipse HX-Delta matrix the above state is detected, and the message appears in EHX logs, then it is advisable to check the health of the CPU card on board battery, which should be nominally at least 2.8V.
The minimum at which the data may remain intact is around 1.5V but normally the battery should be replaced before the voltage drops to this level.

***Danger of explosion if battery is incorrectly replaced**.*
*Replace only with the same or equivalent type.*
*Lithium batteries can overheat or explode if they are shorted.*
*When handling the CPU card or a loose battery, **do not** touch any external electrical conductors to the battery's terminals or circuits to which the terminals are connected.*

**Note:** When servicing the battery, make sure that the jumper on CON9 is connecting pin 2 (common) to either pin 1 (on) or to pin 2 (off). If the common is left floating, the CPU may behave unpredictably. For example, the microprocessor may reset itself intermittently.

## 4.2 Installing the Eclipse HX-Delta

The following overview gives a summary of the steps required to install an Eclipse HX-Delta matrix. More detailed information on each step is provided in the sections that follow.
To install an Eclipse HX-Delta:

- Remove the Eclipse HX-Delta matrix chassis from its shipping carton.

- Install the Eclipse HX-Delta to the standard 19 inch rack.

  ***Environmental note:*** *Leave clearance on all sides of the matrix chassis to ensure proper airflow. Do not block ventilation vents.*

- Check the position of CPU cards and interface cards, power supplies, and rear connector panels. Later sections in this chapter give more information on these items.
- Apply power to the unit using the two external power supplies.

### 4.2.1 Installing the external power supplies

The Eclipse HX-Delta's power is provided by two external 12V power supply units (for redundancy). The power supplies have separate connections to the rear of the matrix (see **4.4.3** Combining interface cards in the matrix).
Each of the power supplies must be connected to a dedicated branch of AC mains power. The matrix will continue to operate even if one of the power supply units fails.
When the matrix is installed to the rack, connect the power cables from the external power supplies to the power connectors on the rear of the matrix.
The power cables connecting the supplies to the matrix can be up to 1.5m in length, and are capable of sustaining a pull test of 10 Newton's. The power cables are secured to the matrix by latching connectors.
When the matrix is connected to the power supplies, connect the power supplies to AC mains power.
A fully equipped Eclipse HX-Delta matrix (2 CPU cards, 4 interface cards and 3 interface modules) requires 100 - 240 VAC at 50 - 60 Hz with a maximum dissipation of 175W.

### 4.2.2 Installing the rear panels

The rear panel of the matrix is constructed of modular, individually-installable connector panels. Each port or expansion card has a corresponding rear-connector panel:

- An MVX-A16 rear panel has 16 RJ-45 connectors.
- E-FIB rear panels have two fiber connectors.
- E-QUE, IVC-32 and LMC-64 rear panels have 11 RJ-45 connectors.
- E-MADI64 rear cards have a MADI fiber connector, MADI input and output coaxial cable connectors, and a coaxial Video / Word clock input.

**Note:** Clear-Com ships each matrix with the required number of rear-connector panels already installed. Blank rear panels fill unused card slots.

To **add** a rear panel to the matrix:

- Remove the desired blank rear panel by loosening the screws and pulling the panel out. The screws are attached and cannot be removed.
- Install the new rear panel by sliding the card into the card's guides at the top and bottom of the Eclipse HX-Delta chassis.
- Tighten all of the screws on the rear panel.

To **remove** a rear panel from the matrix:

- Detach any devices connected to the rear panel's connectors.
- Loosen the screws that hold the rear panel to the matrix. The screws are attached and will not fall off.
- Remove the rear panel by pulling the panel out.

## 4.3 Installing CPU cards

The CPU card's components include CMOS chips which are sensitive to static electricity. Before touching the CPU card touch a grounded metal object, such as any unpainted surface on the matrix, to dissipate static electricity. While handling the CPU card, be careful not to bend any of the card's connector pins or component leads.
Before operating the CPU card the card's battery must be reconnected.

**Note:** The CPU card is shipped with a disconnected battery to preserve battery life. For instructions on reconnecting the battery, see **4.1.3 Reconnecting the CPU card backup battery** in this document**.**

The CPU card switch settings for normal operation (watchdog enabled) are shown in **Figure 4-2**: CPU card DIP switches set for normal operation

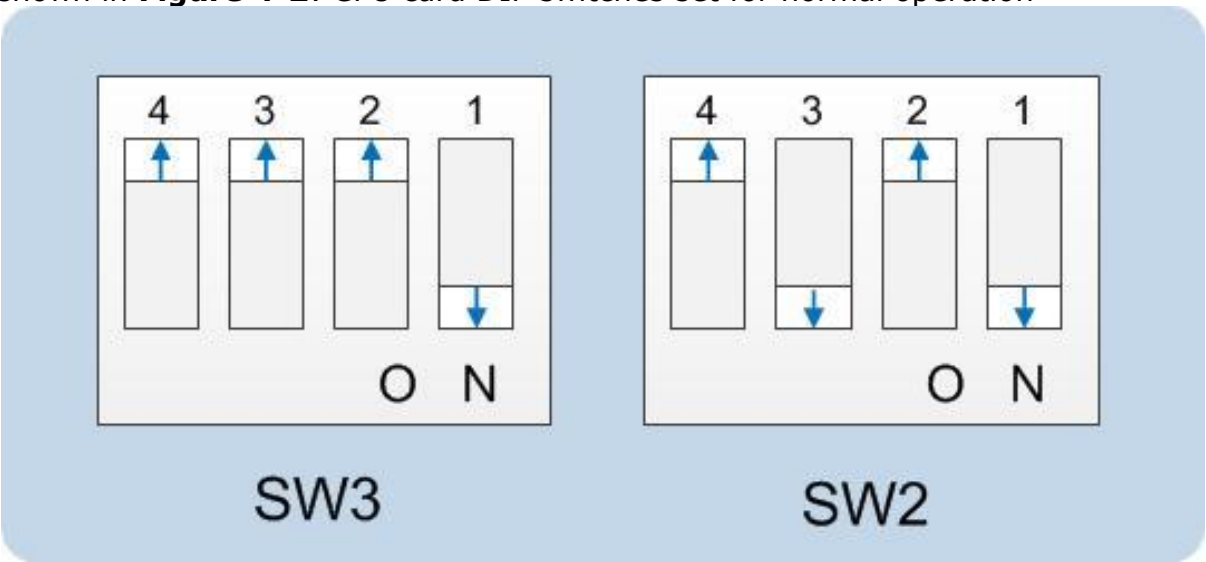


**Figure 4-2: CPU card DIP switches set for normal operation**

**Note:** Store spare CPU cards in unused slots in the matrix or in electrically insulated packaging such as anti-static heavy duty plastic bags.

To **insert** a CPU card in the matrix:

1) Carefully place the card in the appropriate slot. Make sure the card is aligned with the left and right precision guides (the top of the CPU card aligns with the left of the slot)

2) When the card has almost reached the backplane connectors, open the two ejectors, allowing them to clear the edges of the matrix. Gently insert the card further until it touches the backplane connector guides.

3) Gently close both ejector tabs at the same time, which will propel the card into the backplane connectors.

To **remove** a CPU card from the matrix:

1) Hold the card in place in the matrix.

2) There are two card ejector tabs, located on the left and right of the horizontally positioned CPU card. Open the two ejector tabs at the same time until the card unseats from its backplane connectors.

3) Pull the card out of the matrix.

### 4.3.1 Hot patching CPU cards

The CPU cards are **hot patchable** and **self initializing**.
When the matrix is fitted with two CPU cards, a faulty CPU card can be removed and replaced while the system is powered because the second CPU card will automatically begin operating when the first card is removed. It is advisable to replace CPUs in maintenance down times.

### 4.3.2 Checking the CPU Card installation

The following lights indicate that the card has been properly installed in the matrix:

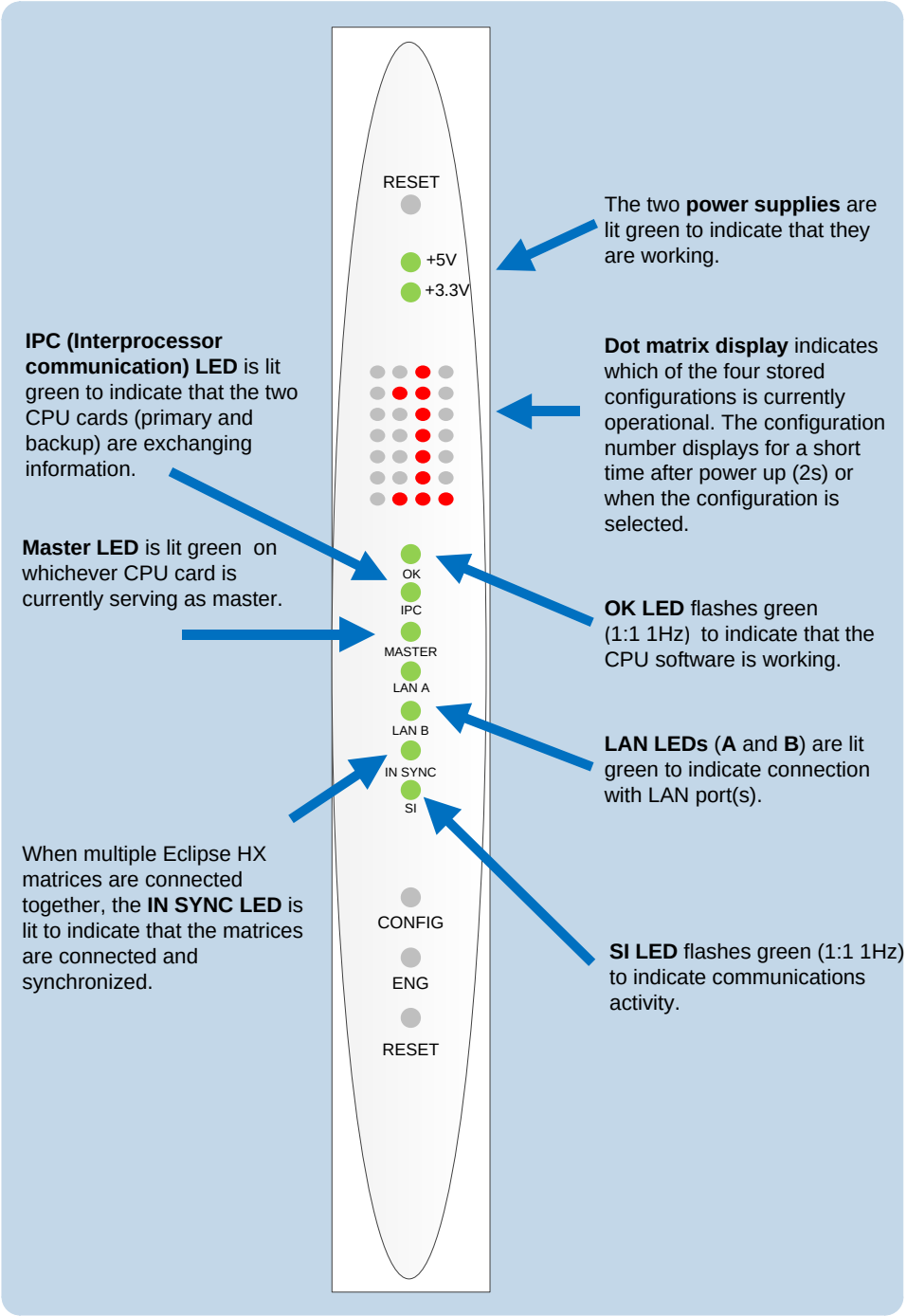


**Figure 4-3: CPU card lights**

**Note:** Once the CPU card has initialized, you can use the **Eng** button to request matrix information (such as the software version and the current IP address). For more information, see **5.5 CPU card lights and controls.**

# 4.4 Installing interface cards

## 4.4.1 Installing an interface card to the matrix

**Note:** Before installing an interface card, ensure that the card's associated rear-connector panel has already been installed.

To install an interface card:

1) Carefully place the card in the appropriate slot. Ensure that the card is aligned with the left and right precision guides (the top of the card aligns with the left of the slot).

2) Push the card toward the backplane connectors.

3) When the card has almost reached the backplane connectors, open the two ejector tabs, allowing them to clear the edges of the matrix. Gently insert the card further until it touches the backplane connector guides.

4) Gently close both ejector tabs at the same time, which will propel the card into the backplane connectors.

## 4.4.2 Removing an interface card from the matrix

To remove an interface card from the matrix:

1) Hold the card in place in the matrix.

2) The two card ejector tabs are located to the left and right of the card. To remove a card, open the two ejector tabs at the same time until the card unseats from its backplane connectors.

3) Pull the card out of the matrix.

## 4.4.3 Combining interface cards in the matrix

The Eclipse HX-Delta can allocate up to 496 audio ports in total. However, the number of ports that you actually use will depend on the combination of interface cards you fit to the matrix.

- An **MVX-A16** card uses 16 audio ports.
- An **E-MADI64** card is configured in EHX to use either16, 32, 56 or 64 audio ports.
- An **IVC-32** card uses 32 audio ports from the total.
- Fitting 4 MVX-A16 cards to the Eclipse HX-Delta would fill the frame, but would only use 64 ports from the possible - ports available:

**4 MVX cards * 16 ports = 64**

More ports can be utilized on the Eclipse HX-Delta by using higher capacity interface cards, such as the E-MADI64 card. For example, if you installed 3 E-MADI64 cards, using 64 audio ports, you could add one more MVX-A16 card.

**(3 E-MADI64 cards * 64 ports) + (1 MVX * 16 ports) = 208**
If you fitted 3 IVC-32 cards, you could add 1 more MVX-A16 card:

**(3 IVC-32 cards * 32 ports) + (1 MVX card * 16 ports) = 112**

**LMC-64 cards** take a port per meter. LMC-64 cards are configured in EHX to 16, 32, 48 or 64 audio meters and the same numbers of ports are allocated at that time.
When an audio level meter is configured using Production Maestro Pro one of the ports allocated to the LMC-64 card is used. If the same audio level meter is being used by more than one Production Maestro Pro client this does not increase the port usage as the audio level data is broadcast.
**E-FIB** cards use a port per channel. E-FIB cards can be configured to use between 16 and 192 ports.
**E-QUE** wireless cards (if not directly connected) use six ports per antenna.
**E-QUE** cards have 60 ports in E1 mode or 48 ports in T1 mode.

**Note:** Clear-Com recommends fitting E-FIB cards to the lower slots on the matrix.

**Note:** Comfort tones use 3 ports which normally default to using the top of the physical port range. If required, the comfort tones can be redirected to ports above 384 in **System Preferences** (for more information, see your EHX documentation).

## 4.4.4 Static sensitivity

***Observe anti-static procedures.*** *Devices can be damaged by static electricity. Personnel reconnecting the battery should ensure that they ground themselves and all tools before touching cards.*

A CPU or interface card's components include CMOS chips that are sensitive to static electricity. Before touching a card first touch a grounded metal object, such as any unpainted surface on the matrix, to dissipate static electricity. When handling a card, be careful not to bend any of the card's connector pins or component leads.
Store spare cards in electrically insulated packaging, such as anti-static heavy duty plastic bags or in unused card slots (though **not** fully seated) in the matrix.

## 4.4.5 Hot patching (hot plugging)

Interface cards are **hot patchable** and **self initializing**, which means that a faulty card can be removed and replaced while the system is powered. Hot patching (also known as hot plugging) has no effect on any part of the system's operation, except the MVX-A16 analog card's assigned sixteen ports. Communication with a card's connected devices will be interrupted when that card is removed from the matrix. When the card is replaced, communication is restored.

### 4.4.6 Configuration

When an interface card is physically installed, its ports must be assigned functions in the EHX configuration software (see your ***EHX documentation***).

### 4.4.7 Checking MVX-A16 analog port card installation

The following front panel lights indicate that an analog port card has been properly installed in the matrix:

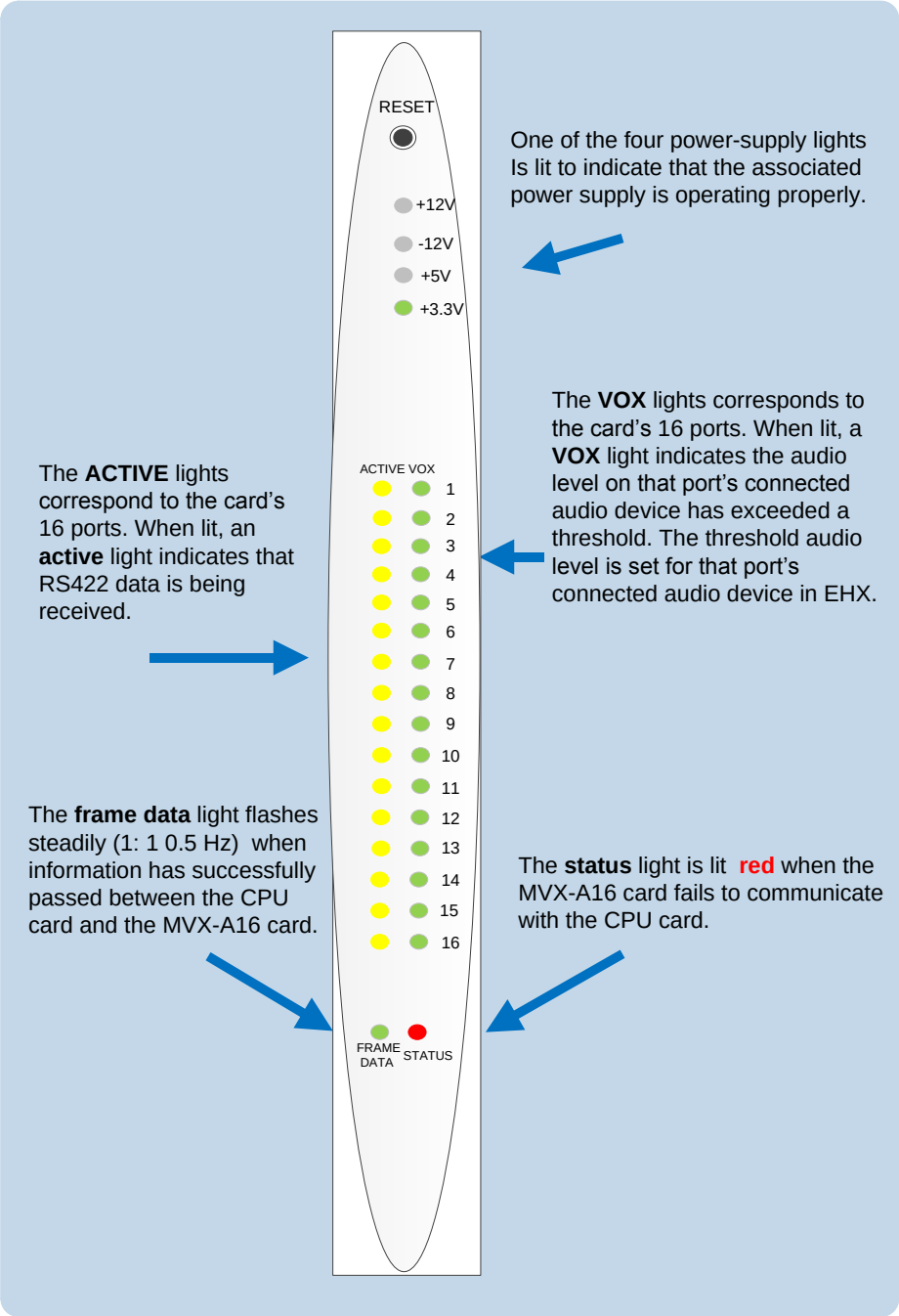


**Figure 4-4: MVX-A16 card lights**

**Note:** For more detailed information about the MVX-A16 front panel controls and lights, see

**5.6 MVX-A16 analog card front-panel lights and controls** in this guide.

## 4.5 Wiring audio devices to the matrix

An external four-wire audio device can be directly connected to a port connector through the four audio pins. If there is excessive noise on the lines between the device and the matrix, the device may be electronically unbalanced with the rest of the system. The device must be isolated with external isolation transformers.
The **CALL SEND** output can be connected to the **CALL REC** input to tell the system software that this is a directly connected port.
EHX allows the changing of the audio output reference level between **-24, -21, -18, -15, -12, -9, -6, -3, 0, +3, +6, +9, +12 and +14 dB**.
With a **+12dB** output reference level, it is possible to drive a **200 - 400 Ohm** headset directly with a port output for such uses as direct IFB feed.
The EHX configuration software allows the changing of the audio input reference level between **-12, -9, -6, -3, 0, +3, +6, +9, +11 dB**.

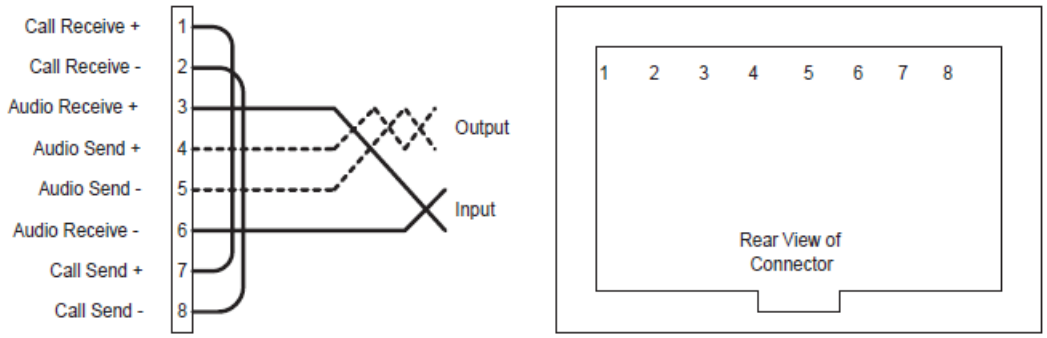


**Figure 4-5: Direct matrix port connection**

Clear-Com recommends the use of shielded cable.

**Note:** The Eclipse HX Installation Guide gives complete details about wiring audio devices to the matrix. The installation guide also discusses RJ-45 cables and other types of cable required for system installation.

## 4.6 Wiring panels to the matrix

Eclipse HX uses a 4-pair (analog) or single-pair (digital) wiring scheme between the matrix and panels. All Eclipse HX user panels (V-Series and I-Series panels) have built-in RJ-45 connectors.

### 4.6.1 4-Pair analog

Four-pair analog wiring is performed with shielded CAT5 RJ-45 cable:

| Pair | Description |
|---|---|
| **Pair 1** | Transmits analog audio from the matrix to the panel. |
| **Pair 2** | Transmits digital data from the panel back to the matrix. |

| | |
|---|---|
| **Pair 3** | Transmits audio from the panel to the matrix. |
| **Pair 4** | Transmits digital data from the matrix back to the panel. |

**Table 6: 4-Pair analog wiring**

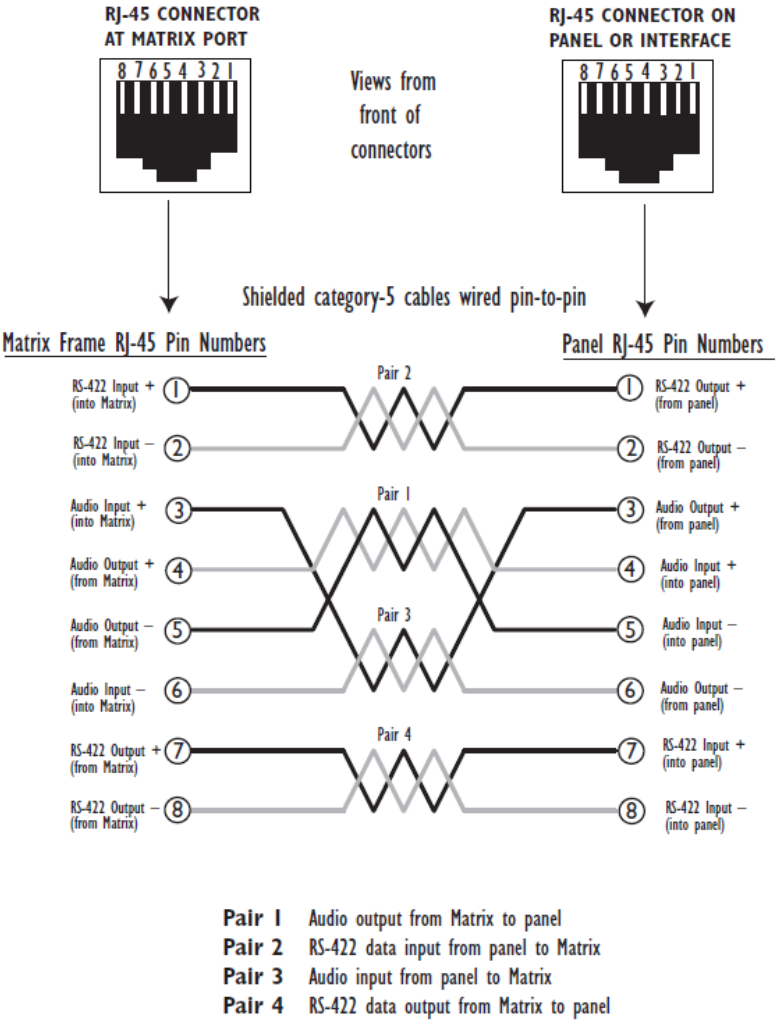


**Figure 4-6: Wiring the matrix to an analog panel using RJ-45**

## 4.6.2 Single-pair digital

Single-pair digital wiring is accomplished with double-shielded 24 AWG conductor CAT-6E enhanced STP cable.

**Pair 1** transmits and receives multiplexed digital and analog between the matrix and the panel. Ensure that the **Select** switch on the rear of the panel is in the correct position for the intended use.

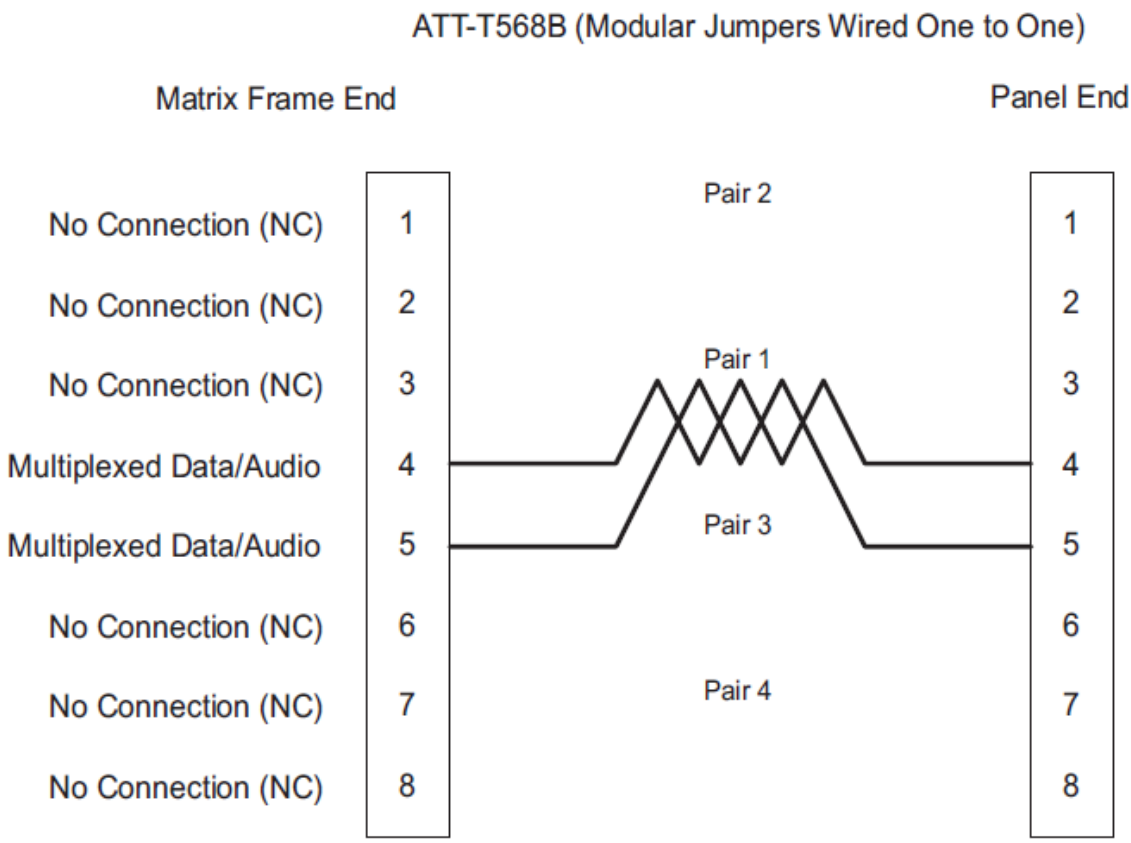


**Figure 4-7: Wiring the matrix to a digital panel using RJ-45**

**Note:** **Important**. The above wiring diagram refers to **DIG-2** and is shown **as an example only** (DIG-2 panels are **not** compatible with the Eclipse HX-Delta.

## 4.7 Wiring CPU card interfaces

The CPU card holds the circuitry for connecting to, and communicating with, the following interfaces:

- An external personal computer.
- Alarm inputs and outputs.
- Eight general purpose inputs (GPIs).
- Eight general purpose outputs (GPOs or relays).
- Two separate local area network (LAN) connections for Ethernet-based communication with a network.
- An external GPI/RLY interface.

### 4.7.1 CPU card interface connectors

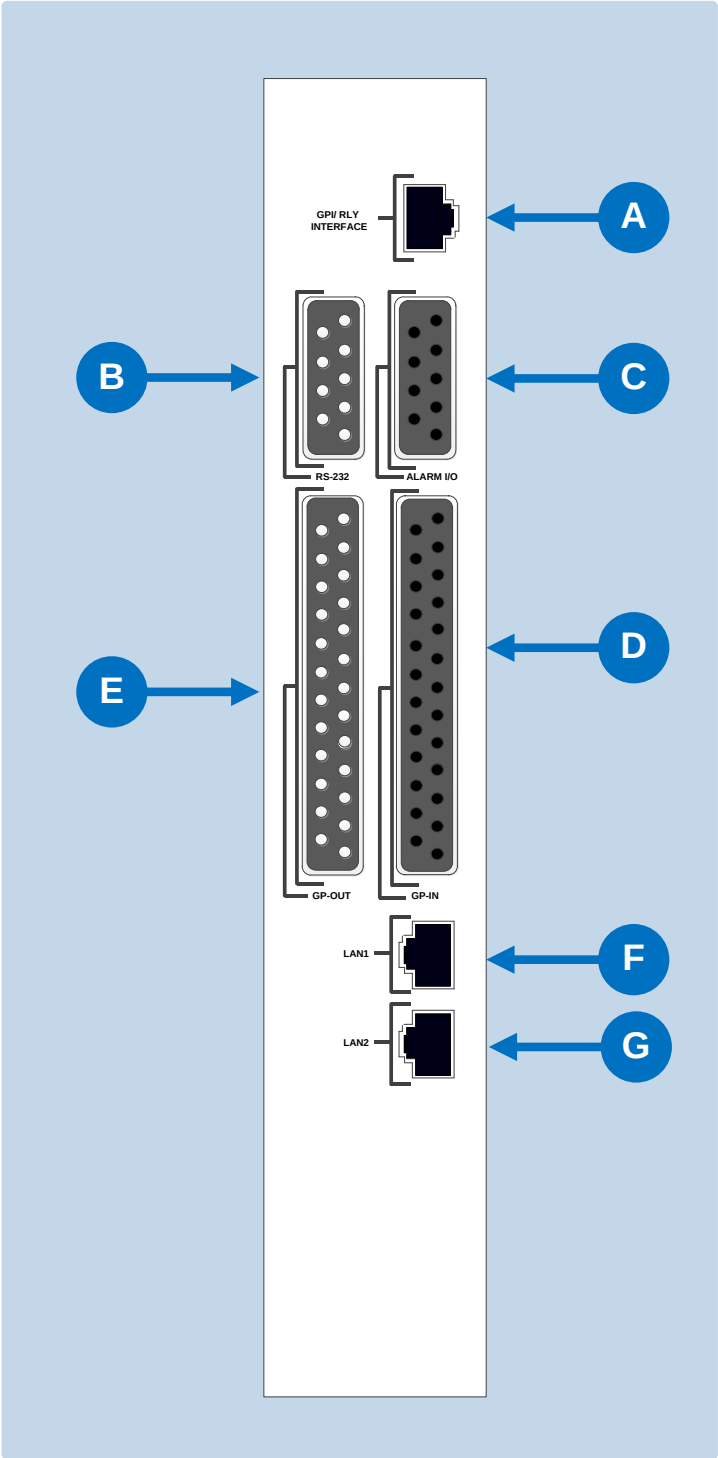


**Figure 4-8: CPU card interface connectors**

| Key to CPU card interface connectors | |
|---|---|
| **Feature** | **Description** |
| A | **GPI/RLY Interface Connector**<br>The RJ-45 socket labeled **GPI/RLY Interface** connects the CPU card to a GPI-6 or RLY-6 card. The GPI-6 provides six general-purpose opto-isolated logic inputs. The RLY-6 card provides six single-pole, double-throw relay outputs.<br>Both card types mount in either an IMF-3 interface frame or an IMF-102 interface frame. Up to ten GPI-6 or RLY-6 cards can be operated at one time from the matrix by daisy-chaining the cards together. Each card has an IN and an OUT connector for this purpose.<br>The RLY-6 and GPI-6 cards connect to the GPI/RLY interface connector using shielded category-5 cable. For more information about the GPI-6 and RLY-6 cards, consult their respective manuals in the Eclipse HX documentation set.<br>*Clear-Com recommends the use of shielded cable.*<br>For wiring pinout information for GPI/RLY interfaces, see:<br>• The ***Relay Interface Module (RLY-6) Instruction Manual***.<br>• The ***General Purpose Inputs (GPI-6) Instruction Manual***. |
| B | **RS-232 DB-9 Connector**<br>The DB-9 connector labeled RS-232 connects the Eclipse HX-Delta matrix to an external computer. To connect a computer to the matrix, run cable from the RS-232 connector to the PC's serial port. The maximum recommended length of the cable is approximately 10 feet (3 meters). A computer has either a 9-pin serial port or a 25-pin serial port.<br> 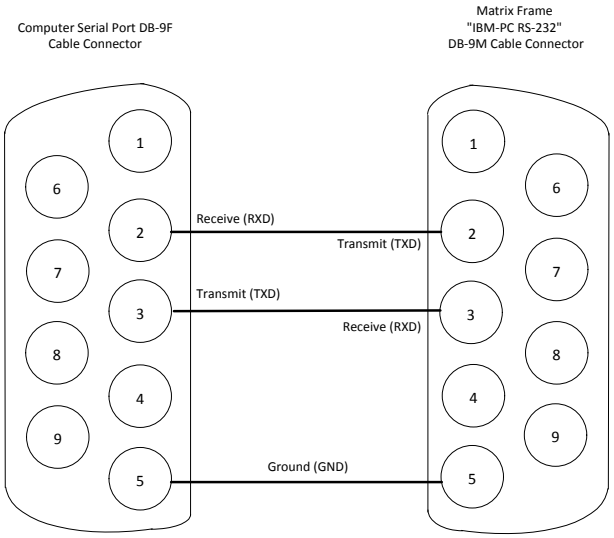 <br><br>**Figure 4-9: Wiring the matrix DB-9M to the PC DB-9F** |

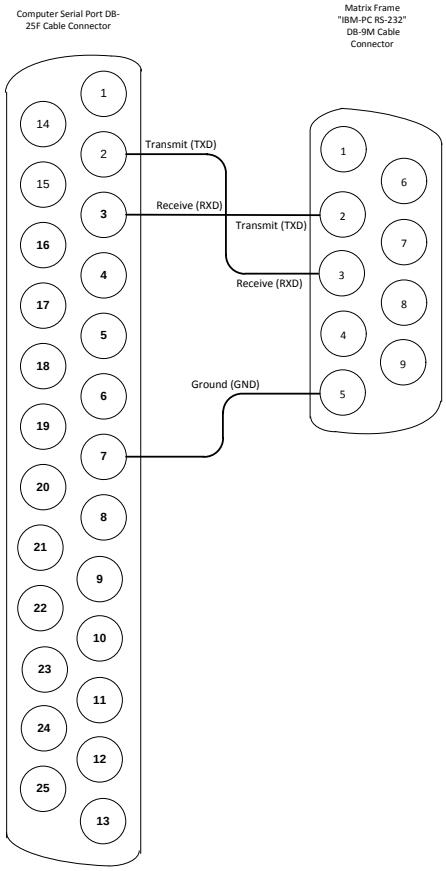


**Figure 4-10: PC DB-25F connector to matrix DB-9M**

C

**Alarm I/O Connector**

The DB-9F connector labeled **Alarm I/O** connects the matrix to a control circuit for an external alarm, such as a light or bell. The external alarm activates whenever an alarm condition is detected in the matrix.

The following conditions trigger an alarm:

- If any of the voltages produced by the first power supply unit fall below their normal levels.
- If any of the voltages produced by the second power supply unit fall below their normal levels.
- If an external alarm circuit or other logic circuit connected to the power supply is activated.
- If either of the two power-supply unit fans stop operating.
- If software on a master CPU card generates an alarm.

An alarm condition activates the relay contacts connected to **pins 4, 5, and 9**. These contacts are "dry", (no voltage is supplied to them by the matrix) and are rated at **1 A at 24 VDC**. They should not be used for AC mains line current.

Pins are provided for adding an additional alarm source to the matrix's alarm system. **Pin 6** is an alarm input to the Eclipse

HX-Delta matrix. It is connected to the input of a 3.3 V logic device.
A logic high on this input will cause the Eclipse HX-Delta matrix to detect an alarm condition. A logic low or an open circuit means that the matrix will not detect an alarm condition.
**Pin 1** is a voltage source out of the Eclipse HX-Delta matrix. It is connected through a 10Kohm pull-up resistor to the **+5 V** supply rail inside the Eclipse HX-Delta matrix.
A contact closure placed across **pins 1 and 6** will also cause an alarm condition.
**Tip:** *The alarm outputs of the PSU-101 power supply could be wired directly to these pins allowing the CPU card to report PSU failures also.*

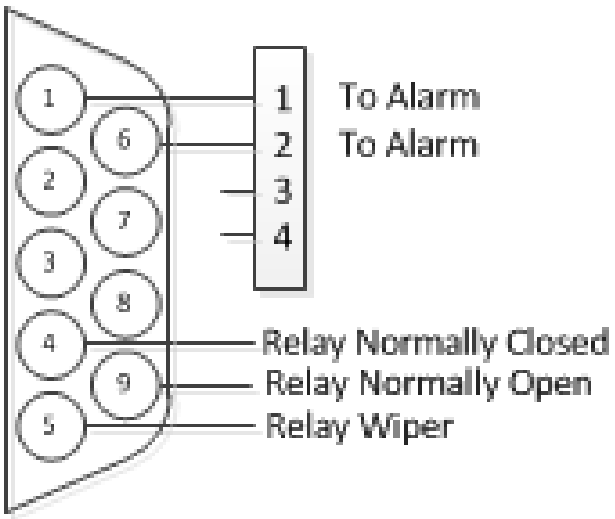


**Figure 4-11: Wiring the Alarm I/O DB-9F to the Alarm Relay connector**

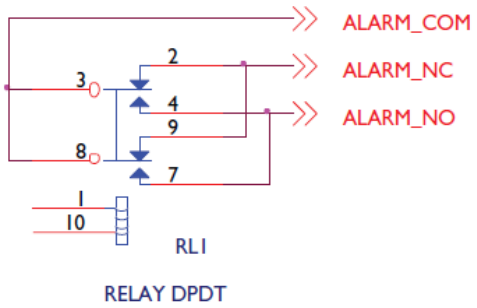


**Figure 4-12: Double-pole double-throw alarm relay**

D

**General-Purpose Outputs Connector (GP OUT)**

A GPO can be programmed to mute a speaker, to turn on an applause light, to turn on a door lock, or to perform a variety of other functions. For example, to get the attention of a panel operator working in a high-noise environment such as a control booth, a relay can be programmed to switch on a light at the operator panel each time an incoming call is received, to ensure that the call is not missed.

The DB-25 connector labeled **GP OUT** connects the matrix to eight double-pole double-throw (DPDT) relays with contact ratings of 30 VDC at 1A.

Each general-purpose output has a relay inside the Eclipse HX-Delta matrix. When a general-purpose output is inactive, the associated **common** pin on the **GP OUT** connector will be shorted to the relevant **normally closed** pin. When a general-purpose output becomes active, the short between the **common** pin is broken and a new connection is made between the **common** pin and the **normally open** pin.

DB-25 Male Connector

| PIN | DESCRIPTION |
|---|---|
| 1 | RELAY 1 Common |
| 2 | RELAY 1 Normally Closed |
| 3 | RELAY 1 Normally Open |
| 4 | RELAY 2 Common |
| 5 | RELAY 2 Normally Closed |
| 6 | RELAY 2 Normally Open |
| 7 | RELAY 3 Common |
| 8 | RELAY 3 Normally Closed |
| 9 | RELAY 3 Normally Open |
| 10 | RELAY 4 Common |
| 11 | RELAY 4 Normally Closed |
| 12 | RELAY 4 Normally Open |
| 13 | GROUND |
| 14 | RELAY 5 Common |
| 15 | RELAY 5 Normally Closed |
| 16 | RELAY 5 Normally Open |
| 17 | RELAY 6 Common |
| 18 | RELAY 6 Normally Closed |
| 19 | RELAY 6 Normally Open |
| 20 | RELAY 7 Common |
| 21 | RELAY 7 Normally Closed |
| 22 | RELAY 7 Normally Open |
| 23 | RELAY 8 Common |
| 24 | RELAY 8 Normally Closed |
| 25 | RELAY 8 Normally Open |

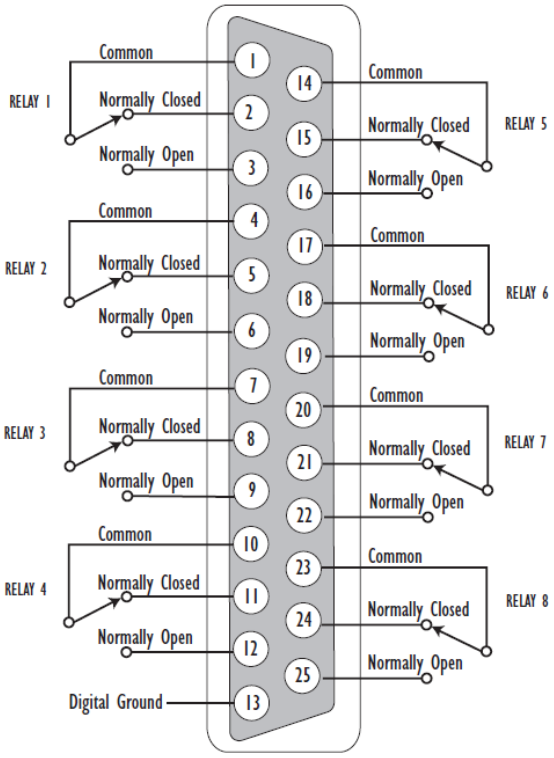


**Figure 4-13: Pin configuration of the GPO connector**

E

**General-Purpose Inputs Connector (GP IN)**

The DB-25 connector labeled **GP IN** connects the matrix to eight local general-purpose inputs (GPIs).

An external device such as a foot switch, a panel-mounted switch or the logic output of some other device can be connected to the **GP IN** connector. When the external device is activated, it sends a control signal into the matrix to perform one of several preset functions, such as turning a user panel's microphone on or off, muting a microphone's output, or turning a panel's speaker off. The function to perform and the panel upon which it is performed is configured using EHX.

A shielded cable should be used.

The general-purpose inputs operate in one of two modes: the **opto-isolated** mode or the non-isolated mode.

The opto-isolated mode requires the externally connected equipment to provide the current to power the general-purpose input. The non-isolated mode does not require that the externally connected equipment powers the general-purpose input. The current is supplied by a voltage output on the **GP IN** connector.

To select a mode, move the J1 jumper on the CPU rear card to one of two positions. The J1 jumper is located on the inner-matrix side of the DB-25 connector.

For **opto-isolated mode**, fit the J1 jumper across **pins 1 and 2**.

For **non-isolated mode**, fit the J1 jumper across **pins 2 and 3.**

It is recommended that the connector is set to the fully opto-isolated mode.

**Opto-isolated mode**

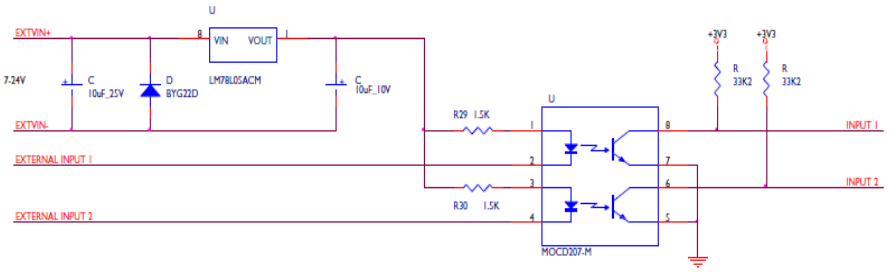


**Figure 4-14: Opto-isolated mode**

In this mode, a DC voltage of between 7 and 24 volts is required at the EXTVIN+ pin with relation to the EXTVIN− pin. To cause an input to detect an active signal, current must flow from the relevant input pin.

The external device should draw no current to cause an inactive input and at least 5 mA to cause an active input. The opto-isolator drive line contains a 1.5 kOhm resistor to limit the current through the opto-isolator. Therefore the input pins can be connected directly to the EXTVIN− level to cause an active input.

The voltage level at the external input pin should not be allowed to go below EXTVIN− or above +6 V with respect to EXTVIN−.

**Non-isolated mode**

To cause an input to detect an active signal in non-isolated mode, the current must flow from the relevant input pin.
The external device should draw no current to cause an inactive input and at least 5 mA to cause an active input. The opto-isolator drive line contains a 1.5 kOhm resistor to limit the current through the opto-isolator. Therefore the input pins can be connected directly to a ground pin to cause an active input.
The voltage level at the external input pin should not be allowed to go below ground or above +6 V with respect to ground.

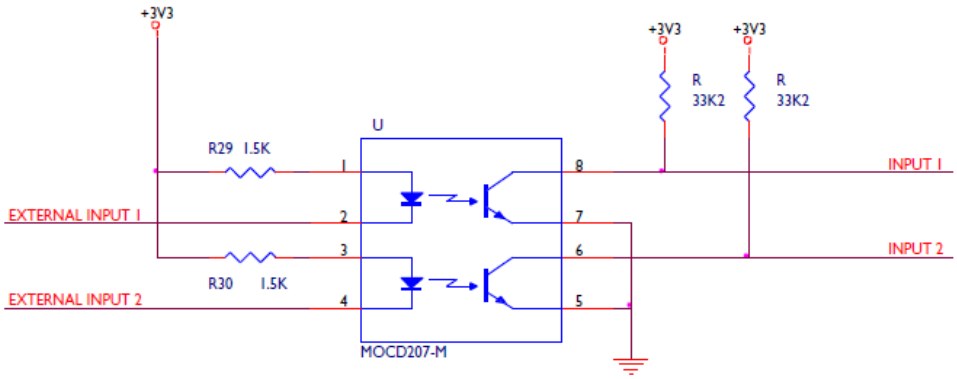


**Figure 4-15: Non-isolated mode**

DB-25 Female Connector

| PIN | DESCRIPTION |
|---|---|
| 1 | Logic Input 1 |
| 2 | Logic Input 2 |
| 3 | Logic Input 3 |
| 4 | Logic Input 4 |
| 5 | N/A |
| 6 | N/A |
| 7 | N/A |
| 8 | N/A |
| 9 | Ground |
| 10 | Ground |
| 11 | Ground |
| 12 | Ground |
| 13 | Ground |
| 14 | Logic Input 5 |
| 15 | Logic Input 6 |
| 16 | Logic Input 7 |
| 17 | Logic Input 8 |
| 18 | N/A |
| 19 | N/A |
| 20 | N/A |
| 21 | N/A |
| 22 | Voltage In+ |
| 23 | Voltage In+ |
| 24 | Voltage In- |
| 25 | Voltage In- |

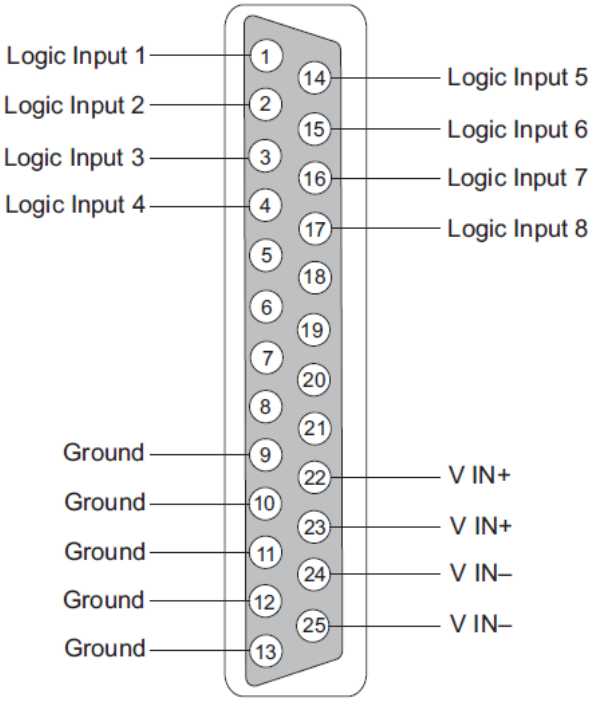


**Figure 4-16: Pin configuration of the General Inputs connector**

F

**Local Area Network connector (LAN1)**

The **LAN1** and **LAN2** connectors have standard Ethernet pin assignments. See G below for pin assignments.

The RJ-45 socket labeled **LAN 1** connects a local area network (LAN) to the CPU card through a standard Ethernet connection. The **green** LED indicates the port is connected and the **amber** LED indicates activity.

*Clear-Com recommends the use of shielded cable.*

G

**Local Area Network connector (LAN2)**

The **LAN1** and **LAN2** connectors have standard Ethernet pin assignments. The **green** LED indicates the port is connected and the **amber** LED indicates activity.

LAN1 and LAN2
Ethernet RJ-45 Connectors

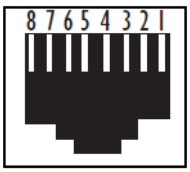


| PIN | FUNCTION |
|---|---|
| 1 | Transmit data + |
| 2 | Transmit data – |
| 3 | Receive data + |
| 4 | Unused |
| 5 | Unused |
| 6 | Receive data – |
| 7 | Unused |
| 8 | Unused |

**Figure 4-17: LAN1 and LAN2 pin assignments**

*Clear-Com recommends the use of shielded cable.*

**Table 7: Key to CPU card interface connectors**

## 4.8 DSE1/T1 Matrix to Matrix crossover cable connections

For E1 and T1 direct matrix to matrix connections the CAT5 crossover cables should be wired, as shown in the table below:

| Matrix 1 Pin | Description | Matrix 2 Pin |
|---|---|---|
| **1** | To | **4** |
| **2** | To | **5** |
| **3** | Not connected | **3** |
| **4** | To | **1** |
| **5** | To | **2** |
| **6** | Not connected | **6** |
| **7** | Not connected | **7** |
| **8** | Not connected | **8** |

**Table 8: E1/T1 Crossover cable**

## 4.9 E1/T1 Matrix to Matrix straight cable connections

E1/T1 straight cables may be used to connect E1 or T1 ports to E1 or T1 networks or third party equipment, as shown in the table below:

| Matrix 1 Pin | Description | Matrix 2 Pin |
|---|---|---|
| **1** | To | **1** |
| **2** | To | **2** |
| **3** | Not connected | **3** |
| **4** | To | **4** |
| **5** | To | **5** |
| **6** | Not connected | **6** |
| **7** | Not connected | **7** |
| **8** | Not connected | **8** |

**Table 9: E1/T1 Straight cable**

## 4.10 E1 to FreeSpeak / CellCom / FreeSpeak II antenna straight cable connection

Straight CAT5 cables are used to connect an E-QUE card to a FreeSpeak / CellCom / FreeSpeak II antenna or splitter.
The E1 pinout for connecting an antenna or splitter is shown in **Table 10 E1 pinout for connecting a FreeSpeak / CellCom / FreeSpeak II** antenna or splitter**.**
Cable wiring is shown in **Table 11: E1 to FreeSpeak / CellCom / FreeSpeak II antenna or splitter** straight cable connection**.**

| Pin | Description |
|---|---|
| **1** | Tx+ |
| **2** | Tx- |
| **3*** | DECTSYNC+ |
| **4** | Rx+ |
| **5** | Rx- |
| **6*** | DECTSYNC- |
| **7*** | GND |
| **8*** | 12V |

**Table 10 E1 pinout for connecting a FreeSpeak / CellCom / FreeSpeak II antenna or splitter**

| Matrix 1 Pin | Description | Matrix 2 Pin |
|---|---|---|
| **1** | To | **1** |
| **2** | To | **2** |
| **3** | Not connected | **3** |
| **4** | To | **4** |
| **5** | To | **5** |
| **6** | Not connected | **6** |
| **7** | Not connected | **7** |
| **8** | Not connected | **8** |

**Table 11: E1 to FreeSpeak / CellCom / FreeSpeak II antenna or splitter straight cable connection**

# 5 Using the Eclipse HX-Delta

This chapter describes how to operate the Eclipse HX-Delta matrix, including its CPU cards and interface cards.

**Note:** For an overview of the Eclipse HX-Delta, see **3 Overview.**

## 5.1 Creating and storing system configurations

A **configuration** is a complete set of operating parameters for the system which includes talk and listen paths for each connected intercom device.
Depending on the interface cards and modules installed, the configuration can include more complex features such as paging, call signaling, interrupt foldback (IFB), ISO, groups, automatic DTMF dialing, and routing.
When an external computer is connected to the matrix, you can:

- Retrieve the current configuration information stored in the CPU microprocessor's memory and display the configuration in EHX.
- Apply the current configuration, modify it, or create a new configuration in EHX.

If you create more than one configuration, you can store the unused configurations on the computer's hard disk or on CD-ROM for later use.

**Note:** The CPU card in the Eclipse HX-Delta stores up to four complete configurations. You can apply a configuration directly from the CPU card or from the connected PC.

## 5.2 Setting the default IP Address

To reset the CPU LAN ports to their default IP addresses, press and hold the **ENG** and **FULL RESET** buttons on the CPU front card until the card resets.

**Note:** Do **not** release the **ENG** and **FULL RESET** buttons until the CPU card LED panel shows either an **A** or a **B**.

The **LAN1** Ethernet port is reset to the factory default address of `169.254.0.100` and the second Ethernet port to the `0.0.0.0` (blank) address.
The **LAN1** reverts to a link local address of `169.254.0.100` only after trying and failing to acquire an IP address from the network at startup.
The **LAN1** defaults to the DHCP mode of operation. This mode of operation is **not** to be used once the matrix is operational as it delays the start-up of the matrix following any reset.

## 5.3 Using the CPU card Ethernet ports

The CPU card Ethernet ports are normally connected to a LAN and used to communicate with clients such as EHX and Production Maestro. The Ethernet port functionality depends on the IP address setup.
If an IP address of `0.0.0.0` is configured on the second Ethernet port, it will not be used for Tx or Rx. This is the default setup if the default IP address is set as described above.

All matrix to matrix traffic is sent out on both Ethernet ports. This applies to both directed and broadcast packets. All matrix to matrix traffic is also received on both Ethernet ports. If the traffic is transaction related, the second (duplicate) message received is not consumed, but simply dropped.
The matrices listen for client connections on both Ethernet ports. Once the connection is made it is added to the list of connections to service. Broadcast type Tx data is duplicated out on each connection (for example, HCI connection to the matrix from 3rd party applications).
The EHX Server makes a connection on either the main or backup Ethernet port of each system in the linked set. If both are up, this will default to the primary port. In the event that connection is lost to the currently active port on a matrix the EHX server will swap over to using the other Ethernet port. If this connection is lost only on one matrix in a linked set, the others will not be affected.

### 5.3.1 Configuration restrictions for Ethernet ports

The network ID on the first Ethernet port must be different to that of the second port.
The network ID is defined by the IP address and the network mask for the port. For example a network address of `172.16.2.1` and a mask of `255.255.0.0` gives a network ID of `172.16`. Therefore in this scheme the second port could not have an IP address, starting with `172.16.`
If the network mask is extended to `255.255.255.0` the network ID becomes `172.16.2` so the second port could have an address of `172.16.3.1` and a mask of `255.255.255.0` giving a network ID of `172.16.3` for the second port. If both Ethernet ports are set up with the same network ID this condition results in data loss on one or both of the Ethernet ports.

**Note:** Ethernet redundancy and the use of a default gateway is **not** supported. An IP address and gateway combination on an Ethernet port means that all Tx traffic to any address is possible on the port. Traffic that actually matches the other Ethernet port can therefore be sent out on the **wrong port**.

## 5.4 CPU card fail-safes

The CPU card's non-volatile memory stores all information about the current operating configuration and the three additional configurations, allowing the system to restore itself automatically after:

- A power failure.
- The replacement of a port card.
- The replacement of a panel.

An Eclipse HX-Delta system operates with either one or two CPU cards.
When a second card is installed, that card stores the four configurations in its RAM as a backup to the main card. If the main card is removed or becomes non-operational for any reason, the system will automatically switch to the second card as backup.

## 5.5 CPU card lights and controls

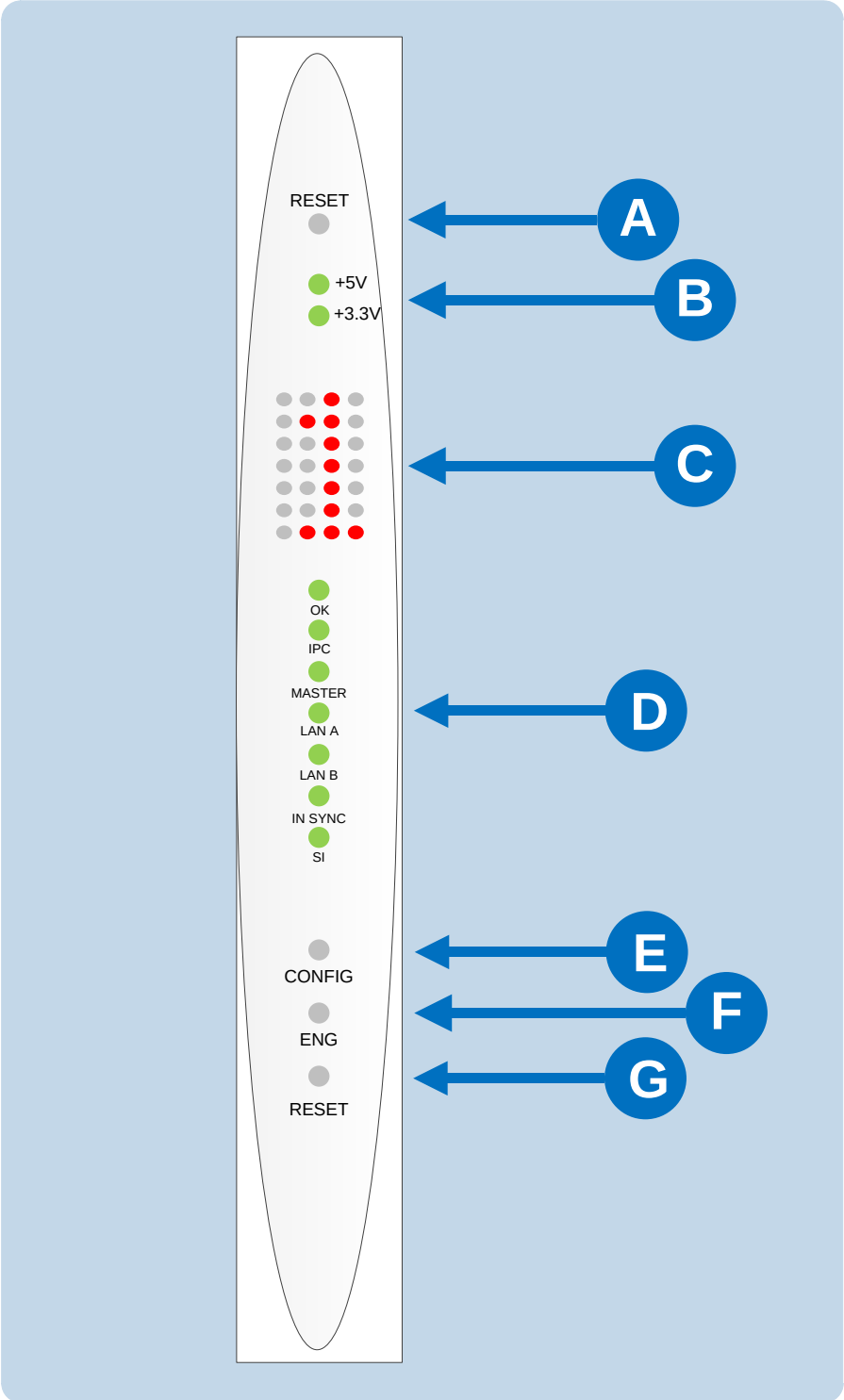


**Figure 5-1: CPU card lights and controls**

| Key to CPU card lights and controls | |
|---|---|
| **Feature** | **Description** |
| A | **RESET button**<br>Pressing the **RESET** button causes the CPU card to stop its current activity and to restart. The same configuration that was active before the system was reset will be active after the system was reset.<br>During the reset, configuration information reloads to the card's operational memory from its non-volatile memory and the card starts running again from the beginning.<br>The reset button is slightly recessed from the front panel to prevent it from being accidentally pressed. A tool such as a bent paper clip is needed to press this button. |
| B | **Power supply lights**<br>**+ 5-Volt light**<br>When lit **green**, the +5V light indicates that the matrix's +5-volt power supply is actively supplying power to the CPU card.<br>**+3.3-Volt light**<br>When lit **green**, the +3.3V light indicates that the matrix's +3.3-volt power supply is actively supplying power to the CPU card. |
| C | **Dot Matrix lights**<br>The rectangular array of lights just below the power-supply lights displays a number (either **1, 2, 3, or 4**) to indicate the currently selected configuration. The EHX configuration software controls these lights.<br>In addition these lights will indicate if the following errors are detected at startup:<br>**NVRAM error**<br>When the NVRAM is found to be corrupt at start up the config card will output the string **CHECK BATTERY**.<br>**Non matching slave firmware**<br>The Eclipse HX system only supports master and slave backup between two cards that are running the same version of firmware. In the case when a non matching slave card firmware version is detected the **NON-MATCHING SLAVE_FIRMWARE** message is displayed by the master CPU card.<br>**Hardware version verification**<br>When an older, unsupported version of the MVX or E-QUE FPGA is detected, the **EQUE FPGA VERSION USUPPORTED** message is displayed by the master CPU card.<br>**Note:**<br>*The dot matrix lights will also display system information when the **ENG** button is pressed on the master CPU card. This is described below in the section on the **ENG** button.* |
| D | **Status lights**<br>**OK Light**<br>When **flashing green**, the OK light indicates that the CPU card is successfully communicating with the EHX configuration software.<br>**IPC (Interprocessor Communication) Light** |

| | |
|---|---|
| | The *Interprocessor Communication* (IPC) light only operates when there are two CPU cards in the matrix. When lit **green**, the light indicates that the two CPU cards are exchanging information.<br>**Master Light**<br>An Eclipse HX-Delta system can have two CPU cards, although the system will operate with only one. If the primary card becomes unavailable for any reason, the second card can serve as backup while the primary card is repaired or replaced.<br>The master light is lit **green** on whichever CPU card is currently serving as master. If there is a backup CPU card in the matrix, its "master" light will not illuminate if the primary card is acting as master.<br>**LAN A Light**<br>When a local area network (LAN) is connected to the matrix's LAN A port, the CPU card's LAN A LED is lit **green** to indicate a connection to the Eclipse Configuration Software LAN A port.<br>**LAN B Light**<br>When a second local area network is connected to the matrix's "LAN B" port, the CPU card's LAN B LED is lit **green** to indicate a connection to the Eclipse Configuration Software (EHX) LAN B port.<br>**Sync Light**<br>When multiple Eclipse HX matrices are connected together the Sync light is lit **green** to indicate that the matrices are connected and synchronized.<br>**SI Light**<br>The SI light **flashes green** to indicate communications activity. |
| E | **Configuration [ CONFIG ] button**<br>The CPU card can hold four complete system configurations in its operational memory. When the **CONFIG** button is pressed the number of the currently active configuration (either **1, 2, 3, or 4**) appears in the dot-matrix display.<br>Each time the button is subsequently pressed the next configuration number in the series appears in the dot-matrix display. The numbers cycle forward until all of the choices have been displayed, then start again at **1**.<br>When a non-active configuration's number appears in the display, it flashes to indicate its non-active status. When an active configuration's number (either **1,2, 3, or 4**) appears in the display, it illuminates solidly (without flashing) to indicate that it is the active configuration.<br>To select one of the four configurations from the CPU card:<br>1. On the front of the CPU card, repeatedly press the **CONFIG** button until the number of the desired configuration (**1,2,3,** or **4**) is shown by the dot matrix display.<br>2. When the desired number is displayed, press and hold the **CONFIG** button until the display stops flashing. This should take about three seconds. |

| | |
|---|---|
| | 3. The selected configuration has now been activated.<br>**Note:** *The CPU card includes an additional, embedded configuration, which can be activated for fast fault checking following a system upgrade or field install. For more information, see* ***5.5.1 Using the embedded configuration.*** |
| F | **Engineering [ ENG ] button**<br>This button is used to reset the system to the default IP address (`169.254.0.100`) with DHCP enabled and to display system information on the LED dot matrix (see ***5.2 Setting the default IP Address***).<br>**System status**<br>If the **ENG** button only on the master CPU is pressed the following system information will be displayed on the LED dot matrix:<br>• **Eclipse HX release**. For example, v7.0 at 7.0.<br>• **Eclipse IP address**. IP address of the LAN 1 port, for example `169.254.000.100`.<br>**Note:** *If this address was not statically allocated, but instead was allocated via DHCP server this will be pre-pended by* ***DHCP ENABLED****.*<br>• **System number**. This is only output if the rack is part of a linked set. It is the system number of the node within the linked set (for example, **SYSTEM 3**).<br>• **Software version number**. Version number of the config card software (for example, **RACK 1.0.2.1**).<br>• **Hardware serial number.** For example, **SERIAL 2251**, in the case where the HW serial number is 2251. |
| G | **Full Reset button**<br>When a full reset is performed, **all** cards in the matrix reset, regardless of any system preferences in the program software. Non-volatile memory is cleared.<br>To perform a full reset:<br>1. Press and hold the CPU card's lower **RESET** button (the **Full reset** button).<br>2. Simultaneously press and release the CPU card's upper **RESET** button.<br>3. Continue holding the CPU card's lower **RESET** button for two seconds.<br>The CPU card then performs a full reset.<br><br>The same configuration that was active before the system was reset will be active after reset.<br>When the cards and connected audio devices reset, they momentarily stop their current activity and restart. During this process configuration information is downloaded to the cards and audio devices from the CPU card's non-volatile RAM. |

| | |
|---|---|
| | **Note:** *Under normal operating conditions it is not necessary to perform a full reset. Technical personnel might perform a full reset if they believe that the CPU card is operating incorrectly as a result of corruption of the microprocessor's internal data or instruction sequence.* |

**Table 12: Key to CPU card lights and controls**

### 5.5.1 Using the embedded configuration

In addition to the four EHX configurations that can be stored on the card, the CPU card also includes an embedded configuration. The embedded configuration is designed for fast fault checking following a system upgrade or field install (for example, checking hardware connections with user panels and interface cards).

**Note:** The embedded configuration may also be used as a back-up configuration, in the very rare event that a system error renders the other configurations unusable.

To activate the embedded configuration:

1) On the front of the CPU card, press and hold the **CONFIG** and the **ENG** buttons.

2) Simultaneously, reset the CPU card by pressing and holding the CPU card's lower **RESET** button (the **Full reset** button).

   **Note:** A tool, such as a pin, is used to press and hold the **RESET** button.

3) Continue holding the **CONFIG**, **ENG** and **RESET** buttons until the CPU card's dot matrix display displays **0**. It may take 1 - 2 seconds before **0** is displayed.

   The embedded configuration has now been activated.

To deactivate the embedded configuration, perform a CPU card reset.
The configuration (**1**, **2**, **3** or **4**) that was previously active on the CPU card replaces the embedded configuration as the active configuration.

## 5.6 MVX-A16 analog card front-panel lights and controls

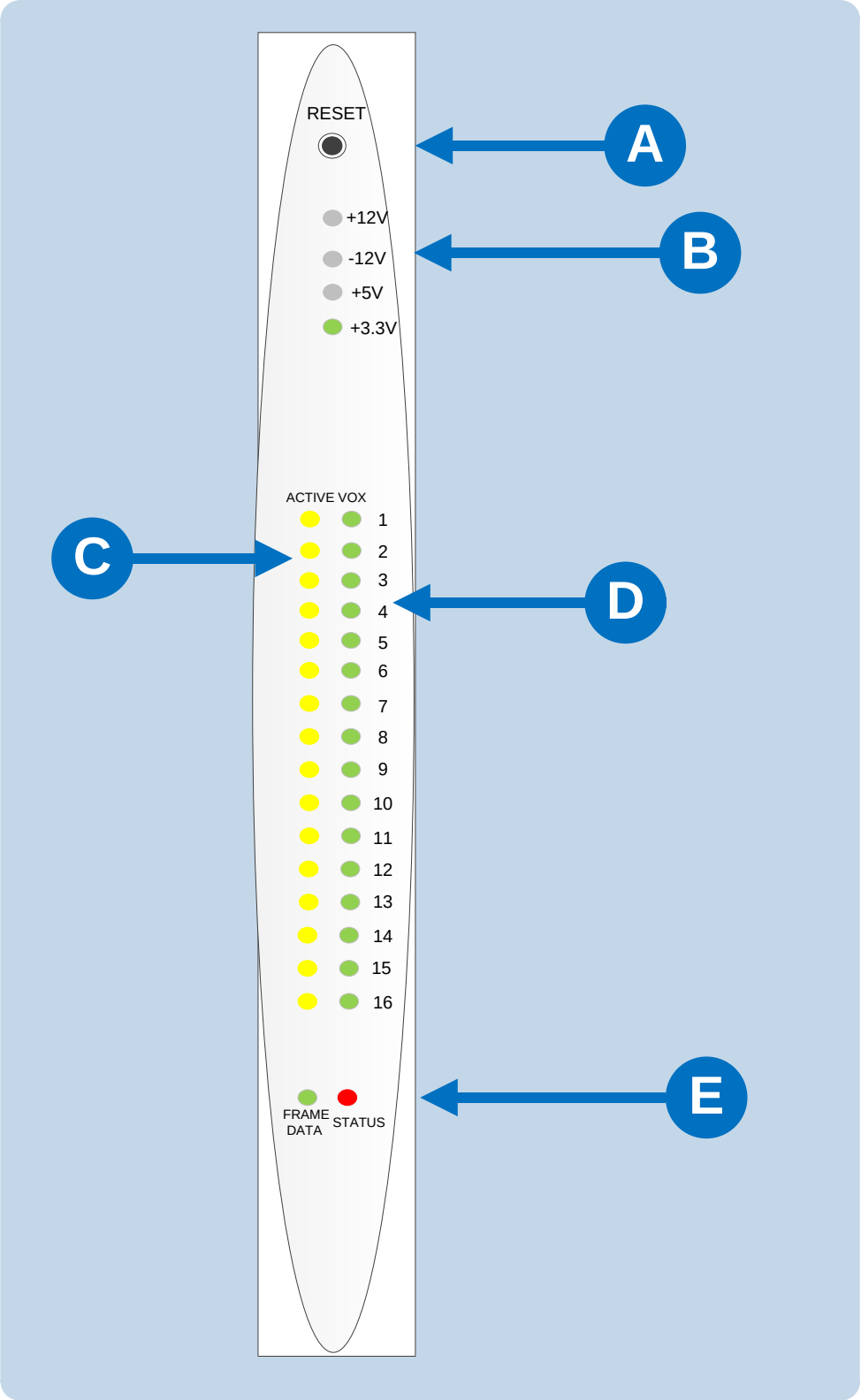

**Figure 5-2: MVX-A16 analog card front panel lights and controls**

| Key to MVX-A16 analog card lights and controls | |
|---|---|
| **Feature** | **Description** |
| A | **RESET button**<br>Pressing the **RESET** button causes the card and all connected audio devices to momentarily stop their current activity and to restart. The card's "matrix data" light goes off when the reset starts and comes back on when the reset is complete.<br>During the reset, configuration information downloads to the card and its connected audio devices from the CPU card. If the entire system is operating except for one port card, or one or more panels connected to the card, press the reset button for that card only. **Tip:** *The reset button is slightly recessed from the front panel to prevent it from being accidentally pressed. A tool such as a bent paper clip is required to press this button.* |
| B | **Power supply lights**<br>**+12-Volt and -12-Volt Power Supply Lights**<br>The matrix's +12-volt and -12-volt power supplies provide electric current to these two green lights. When lit, these lights indicate that the matrix's +12-volt and -12-volt power supplies are present and supplying electric current to the card.<br>**+5-Volt Power Supply Light**<br>The matrix's +5-volt power supply provides electric current to this green light. When lit, the light indicates that the +5 supply is present and supplying electric current to the card.<br>**+3.3-Volt Power Supply Light**<br>The matrix's +3.3-volt power supply provides electric current to this green light. When lit, the light indicates that the +3.3-volt supply is present and supplying electric current to the card. |
| C | **Active Lights**<br>When lit, an **active light** indicates successful communication between the port card and a connected device such as an intercom panel or interface.<br>Each of the port card's 16 **yellow** **active lights** corresponds to one of 16 rear-panel connectors or "ports" to which audio devices can be connected. |
| D | **VOX Lights**<br>When lit a **VOX** light indicates that the audio level on a connected device, such as an intercom panel or interface, has exceeded a preset threshold. The threshold audio level is set through the EHX application.<br>Each of the port card's 16 **green** VOX lights corresponds to one of 16 rear-panel connectors or "ports" to which audio devices (intercom panels or interfaces) can be connected. |

| | |
|---|---|
| E | **Matrix Data Light**<br>The **green matrix data light** flashes (1: 1 0.5Hz) to indicate successful communication between the port card and the CPU card.<br>**Status Light**<br>The **red status light** illuminates to indicate a failure in communication between the port card and the CPU card. |

**Table 13: Key to MVX-A16 analog front panel lights and controls**

## 5.7 Power status and alarm lights

**Note:** The location of the power status lights, the alarm lights and the reset button are shown in Figure 3-1 EHX Delta front panel.

The front panel of the Eclipse HX-Delta displays power status and alarm lights. An alarm source turns on the main alarm light [**Alarm**] (and an audible warning) and one of the alarm lights dedicated to a specific alarm condition. This enables you to identify or correct alarm conditions before they affect the operation of the matrix.
Under normal operating conditions, the **red front-panel alarm lights** stay off, while the **green power supply light** stays on continuously.

### 5.7.1 Power status light [Power Good]

When lit, the **green** power status **[Power Good]** light indicates that the matrix is receiving sufficient power from either of the two external 12V power supplies.

### 5.7.2 Alarm lights and alarm reset button

The following conditions trigger an alarm:

- If any of the voltages produced by the **first** external power supply unit fall below normal levels.
- If any of the voltages produced by the **second** external power supply unit fall below normal levels.
- If an internal matrix alarm condition activates a matrix relay to turn on an external alarm.
- If the active CPU card exceeds a temperature threshold.
- If either of the CPU cards is removed from the matrix.
- If either of the matrix’s two cooling fans stop operating.
- If the temperature inside the matrix exceeds a set threshold.

#### 5.7.2.1 Alarm reset button

When the alarm reset button is pressed the following events take place, even if the alarm condition has not been corrected:

- The internal audible alarm buzzer stops buzzing.
- Any wired relay contacts return to their inactive state. If these relays are connected to external alarm lights or alarm buzzers, those lights or buzzers shut off.
- If the original alarm condition still exists, the red main alarm light on the matrix's front panel continues to flash. The red main alarm light only stops flashing when all original sources triggering the alarm are corrected.
- If a new alarm condition or conditions occur before the original alarm conditions are corrected, the internal buzzer and relay contacts will not reactivate. They will only reactivate after all original alarm conditions are corrected.

#### 5.7.2.2 Main alarm light [Alarm]

An alarm source triggers the **red** main alarm light **[Alarm]** and also one of the additional, specific **red** alarm lights, allowing you to identify or correct alarm conditions before they affect the operation of the matrix (see below).
An audible warning (buzzing) is also given.

**Note:** Any installed alarm relay outputs switch to active (the normally open contact closes and the normally closed contact opens). When the alarm relay activates, it can cause an externally connected device like a light or buzzer to switch on.

#### 5.7.2.3 CPU card alarm light [Config Alarm]

When lit, the CPU card **[Config Alarm]** **red** alarm light indicates a CPU card failure.

#### 5.7.2.4 External alarm light [Ext Alarm]

When lit, the **red** external alarm **[Ext Alarm]** light indicates that an external alarm has triggered the external alarm input. The external alarm is connected to the matrix through the 9-pin D-type connector on the matrix's rear panel labeled **Alarm I/O**.

#### 5.7.2.5 Temperature warning light [Overtemp]

When lit, the **red** temperature warning light **[Overtemp]** indicates that the matrix is above the maximum operational temperature limit and is in danger of overheating (for the acceptable temperature range, see **13.3 Environmental** in this document*)*..

**Internal PSU failure light [Int PSU Fail]**

When lit, the **red** internal PSU failure light **[Int PSU Fail]** indicates that the internal power supply has failed.

**External PSU failure lights [Ext PSU Fail (1/2)].**

There are two external PSU failure lights, one for each of the twin external 12V power supplies.
When lit, the **red** warning light indicates that the external power supply has failed. If both lights are lit, both the power supplies have failed.

#### 5.7.2.6 Fan failure lights [Fan Fail (1/2)].

There are two cooling fan failure lights, one for each of the two cooling fans in the matrix.
When lit, the **red** warning light indicates that a fan has failed. If both lights are lit, both the fans have failed.

## 5.8 Connecting the matrix

**Note:** For detailed information about connecting the matrix to user panels, interfaces and other devices, see **4 Installing the Eclipse HX-Delta** in this document**.**

The Eclipse HX-Delta matrix connects to devices such as the external computer that runs the EHX configuration software, panels, interfaces, and other matrices through its rear-panel hardware connectors, often called **ports**.
These connectors are housed in modular removable panels. Each panel is associated with a corresponding front-panel interface or CPU card.

### 5.8.1 Eclipse HX-Delta rear connector panels

There are seven types of rear-connector panels:

| Panel | Description |
|---|---|
| **CPU card** | A CPU-card rear panel holds the various connectors associated with the CPU card, such as the RS-232 connector for the configuration computer. |
| **Analog port card (MVX-A16)** | Analog port-card rear panel holds the sixteen RJ-45 connectors associated with its corresponding analog port-card front panel.<br>User panels and interface modules connect to the matrix through this rear-connector panel. |
| **E-MADI64 card** | An E-MADI64 rear card comprises a MADI fiber connector, MADI input and output coaxial cable connectors, and a coaxial Video / Word clock input. |
| **E-FIB fiber card** | An E-FIB fiber card provides two ports to connect fiber network cables. |
| **E-QUE card** | An E-QUE card provides eight RJ-45 ports for connection to wireless equipment and three RJ-45 ports for DECT sync and LAN connections. |
| **IVC-32 card** | An IVC-32 card provides a RJ-45 port for connection to an IP network. No other ports are used. |
| **LMC-64 card** | An LMC-64 card provides a RJ-45 port for connection to an IP network. No other ports are used. |

**Table 14: Rear connector panels**

**Note:** A **blank panel** covers an unused slot in the matrix.

## 5.8.2 Connecting the CPU Card

The rear-connector panel associated with the CPU card holds seven connectors

**Note:** For a detailed description of each connector, including wiring and pinout information, see **4.7.1 CPU card interface connectors.**

A matrix only requires one rear-panel CPU card, because whichever of the two front-installed CPU cards is acting as master will work in conjunction with this card. All other front cards, however, require their own rear-connector panel.

**Note:** For detailed information about connecting the matrix to panels, interfaces and other devices, see **4 Installing the Eclipse HX-Delta**.

## 5.8.3 Connecting interface cards

Each rear-connector panel associated with an **MVX-A16** (analog) interface card holds the sixteen RJ-45 connectors that connect the matrix to user panels, interface modules and other intercom devices. Each front-installed MVX-A16 port card requires a corresponding rear-connector panel. Blank panels cover unused slots.
Each port on the matrix can be located and identified by using the rear-panel numbering grid:

- Port rows are numbered 1 through 16.
- Port columns are numbered 1 through 7.
- CPU card columns are numbered P1 and P2. (One rear panel operates with either of the currently active CPU cards).

  **Note:** A port can be identified precisely by identifying its card number and port number on the card. For example, the ports on the first card are designated 1-1, 1-2, 1-3, 1-4, and so on; the ports on the second card are designated 2-1, 2-2, 2-3, 2-4, and so on.

Each rear connector panel associated with an **E-QUE** interface holds eleven RJ-45 ports:

- Eight ports for connection to wireless equipment.
- Two ports for DECT sync.
- One port for LAN connections.

Each rear connector panel associated with an **IVC-32** interface holds eleven RJ-45 ports:

- Eight ports for connection to E1/T1 equipment (not used).
- Two ports for DECT sync (not used).
- One port for LAN connections, used for IP-enabled V-Series panels and Concert soft-panels.

Each rear connector panel associated with an **LMC-64** interface holds eleven RJ-45 ports:

- Eight ports for connection to E1/T1 equipment (not used).
- Two ports for DECT sync (not used).
- One port for LAN interface used for broadcasting audio levels to Production Maestro Pro clients.

Each rear connector panel associated with an E-FIB interface holds two fiber ports (TXVRA and TXVRB).

**Note:** For detailed information about connecting the matrix to user panels, interface modules and other devices, see **4 Installing the Eclipse HX-Delta** in this document**.**

# 6 E-MADI64 card

The E-MADI64 is a **MADI (*Multichannel Audio Digital Interface*)** card, providing up to 64 duplex channels of AES3 digital audio over a coaxial cable or fiber pair between compatible devices. The card supports both direct and trunk connections.

You can limit the quantity of channels to 32, 56 or 64 channels in EHX. This is useful if you have a need to conserve intercom resources.

The E-MADI card supports up to 32 V-Series Panels. See 6.5 V-Series Panels on E-MADI

Each E-MADI64 card set comprises:

- A front card with pin reset and various status indicators (including channel quantity, sample rate, power and diagnostic (active and error) indicators).
- A rear card with a MADI multimode fiber connector, MADI input and output coaxial cable connectors, and a coaxial Video / Word clock input.

The standard maximum cable length is 2km, using fiber cable, or 50m using coaxial cable. Up to 15km is available to special order, using the single mode fiber option.

**Note:** All MADI channels have standard EHX settings, including VOX and in-use tally.

## 6.1 E-MADI64 front panel lights and controls

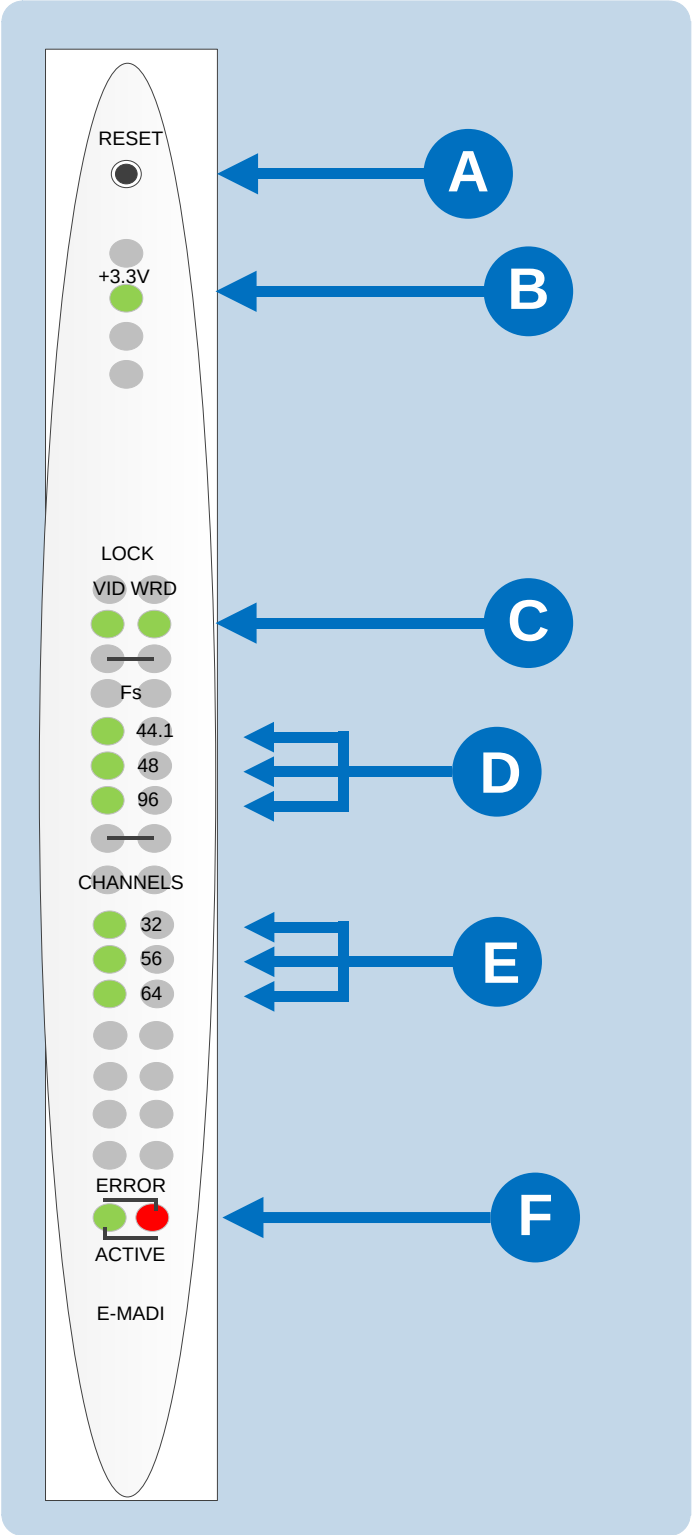


**Figure 6-1: E-MADI64 front panel lights and controls**

**Note:** **Figure 25** shows an **unconfigured** E-MADI64 card, when **all** lights are lit to indicate their location.

On a card with a clock source and MADI connections ( where the received MADI signal matches the card set up), the following lights are lit: the **Lock source** LED [ C ], the **Sample rate (Fs)** LED [ D ], the **Channels** LED [ E ] and the **Active** LED [ F ]. The Error LED [ also F ] is lit when there is no clock source or MADI input.

| Key to E-MADI64 front panel lights and controls | |
|---|---|
| **Feature** | **Description** |
| A | **Reset button**<br>Pressing the **Reset** button causes the card and all links to momentarily stop their current activity and to restart. The **flashing green Active** light goes off when the reset starts and comes back on when the reset is complete.<br>During the reset, configuration information downloads to the card and its connected matrices from the CPU card. If the entire system is operating except for one E-MADI64 card, press the reset button for that card only. **Tip:** *The reset button is slightly recessed from the front panel to prevent it from being accidentally pressed. A tool such as a bent paper clip is needed to press this button.* |
| B | **+3.3-Volt Power Supply LED**<br>The matrix +3.3-volt power supply provides electric current to this **green** light. When lit, the light indicates that the +3.3-volt supply is present and supplying electric current to the card. |
| C | **Lock source**<br>A **green** light indicates that the E-MADI64 card has locked to the clock source (**either** video (**VID**) or Word Clock (**WRD**)). |
| D | **Sample rate or Sf (Sampling frequency)**<br>A **green** LED indicates the current sampling rate of the MADI channels. The sample rate is determined in EHX when a video sync is used, or automatically detected from the clock source when a Word clock is used.<br>Note: *If the quantity of channels is **32**, the sampling rate is either **44.1KHz, 48KHz** or **96KHz**.If the quantity of channels is either **56** or **64**, the sample rate is either **44.1KHz** or **48KHz**.*<br>*The Sample rate LED on the front of the E-MADI64 will oscillate between two sample rates when the received sample rate differs from the transmitted sample rate.* |
| E | **Channels**<br>A **green** LED indicates the quantity of MADI channels. The number of channels is determined in EHX. You can select from 32, 56 or 64 full duplex channels of digital audio.<br>Note: *Channel LEDs on the front of the E-MADI card will oscillate between two channel numbers when the number of channels received differs from the number of channels set in EHX.* |

| | |
|---|---|
| F | **Diagnostics**<br>**Active LED**<br>The **Active (matrix data) LED** **flashes green** (1:1 at 0.5Hz) to indicate successful communication between the E-MADI64 master card and the CPU card.<br>**Error LED**<br>The **Error** (**status) LED** is lit **solid red** when there is no clock source or MADI input.<br>Note: *During boot up, the **Active** and **Error LEDS** flash rapidly until the boot sequence is completed.* |

**Table 15: Key to E-MADI64 lights and controls**

## 6.2 E-MADI64 rear panel connectors

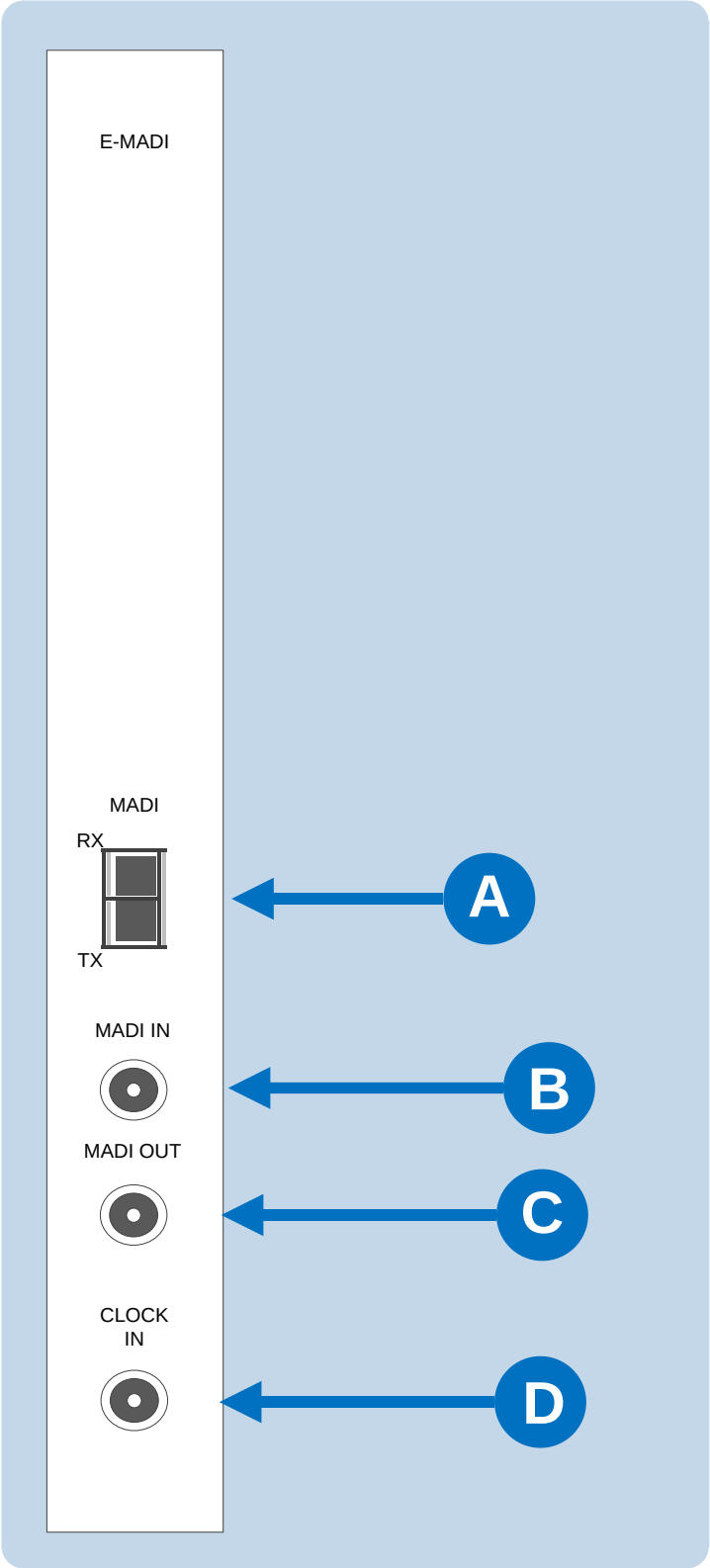


**Figure 6-2: E-MADI64 rear panel connectors**

**Warning: Eye Safety**

***This LED based single mode transceiver is a Class 1 LED product.*** *It complies with IEC 60825-1/A2:2001 and FDA performance standards for laser products (21 CFR 1040.10 and 1040.11) except for deviations pursuant to Laser Notice 50, dated July 26, 2001.*

*Normally a protective plug is fitted to the fiber connector to protect the connector from damage or the entry of foreign materials. The protective plug should only be removed in order to fit the fiber optic cable. Replace the plug when the cable is unplugged.*

| Key to E-MADI64 rear panel connectors | |
|---|---|
| **Feature** | **Description** |
| A | **MADI Fiber connector (Tx and Rx)**<br>The connector is a fiber (MM) SFP Duplex LC removable transceiver module |
| B | **MADI IN coaxial connector** |
| C | **MADI OUT coaxial connector** |
| D | **Video / Word clock coaxial connector**<br>The clock source is either NTSC/PAL Black and burst, Tri Level HD video sync or AES Word Clock. |

**Table 16: Key to E-MADI64 rear panel connectors**

## 6.3 MADI channels

The E-MADI64 card can route up to 64 MADI channels of audio.

**Note:** The channel modes for the E-MADI64 are 32, 56 and 64. For more information, see **Table 17: E-MADI64 channel** modes**.**

Each MADI audio channel:

- Carries one (or a mixture of) any of the 512 Eclipse HX-Delta backplane timeslots.
- Is 24 bits in length.

You can configure the input and output gain for each MADI audio channel in EHX and / or Production Maestro Pro software. The configurable range for MADI audio channels is **-72dB to +18dB**.

### 6.3.1 MADI channel labelling

The 4-character channel ID for each MADI input channel is taken from the provided embedded data bits. The channel ID for each MADI output channel can be re-labeled in EHX, or alternatively replaced with Production Maestro Pro alias labels. This means that Eclipse HX user panels can automatically show the MADI channel ID (or Alias as supplied from Production Maestro Pro).
The channel labeling options in EHX are therefore:

- To use the 4-character, 3rd party ID, provided from the input channel.
- To use the Production Maestro Pro Alias.
- To disable the ID and use the EHX port name.

## 6.4 Setting up the E-MADI64 card

To set up the E-MADI card:

1) With the Eclipse HX-Delta powered off, insert the E-MADI front and rear cards into the matrix.

   **Note:** The number of E-MADI64 cards you can fit to the matrix is limited by the available port count. There are 496 ports available on the Eclipse HX-Delta.

2) Power up the Eclipse HX-Delta and open the EHX configuration software.

3) Add the E-MADI64 cards to the EHX configuration. If you are creating a new configuration, use **Layout mode** to discover the cards:

   a. Drag the matrix into the work area.

   b. The **New Configuration** dialog is displayed. Select **Discover Hardware**.

   c. Click **Ok**.

   If this is an established configuration:

   a. Go to **Hardware > Cards and Ports**.

   b. To add the cards, do either of the following:

      - Click **Detect New Hardware**. The cards are discovered and automatically assigned to a slot on the matrix.
      - Use the drop-down lists to manually assign the cards to slots on the matrix.

4) Configure EHX settings for the E-MADI64 cards. Standard EHX settings (including **VOX** and **In-use** tally) are applicable to **all** E-MADI64 channels.

   **Note:** **Card Properties** permits sample rate selection when synching to video signals. It is only used when **not** using the **Word Clock Source Sync** (see below).

**Note:** **Card Properties** always defaults to the E-MADI64 standard for the **number of channels**:

| E-MADI64 channel mode | Sample rate | Configurable ports |
|---|---|---|
| **32** | 96k | 32 |
| **56** | 44.1k or 48k | 56 |
| **64** | 44.1k or 48k | 64, 32 or 16 |

**Table 17: E-MADI64 channel modes**

5) Apply the changes to the matrix with a reset.

### 6.4.1 Connecting a Word Clock source

If you connect the **Word Clock** source to the **Clock Input** connector on the rear card (see **Table 16** above):

- The **WRD** LED on the front of the E-MADI64 card is lit **solid green**, indicating that the word clock has been detected and locked onto.
- The number of configured ports and the detected sample rate (as provided by the word clock) is indicated by **flashing green** LEDs (1:1 at 0.5Hz) on the front of the E-MADI64 card.
- The **Error** LED on the E-MADI64 card is lit **solid red.**

### 6.4.2 Connecting a video source

If you connect a video source to the **Clock Input** connector on the rear card (see **Table 16** above):

- The **VID** LED on the front of the E-MADI64 card is lit **solid green**, indicating that the word clock has been detected and locked onto.
- The number of configured ports and the sample rate (configured in EHX) is indicated by **flashing green** LEDs (1:1 at 0.5Hz) on the front of the E-MADI64 card.

### 6.4.3 Connecting E-MADI64 Audio (using Coaxial or Fiber cable)

When you connect the external E-MADI64 Audio (using Coaxial or Fiber cable) to the rear of the E-MADI64 card:

1) The sample rate and the number of configured ports is indicated by a **solid green** LED on the front of the E-MADI64 card.

2) The **red** **Error** LED on the E-MADI64 card is **turned off**.

3) When the number of received channels differs from the number of channels configured in EHX, the **Channel** LEDs on the front of the E-MADI64 card **flash green**, oscillating between 2 types of port numbers.

4) When the received sample rate differs from the configured sample rate, the Sample rate LEDs on the front of the E-MADI64 card **flash green**, oscillating between 2 types of sample rates.

5) Audio passes into and out of the E-MADI64 card to the HX-Delta backplane.

## 6.5 V-Series Panels on E-MADI (Multi-channel Audio Digital Interface)

The E-Madi card supports up to 32 V-Series panels over a suitable infrastructure. To set up V-Series panels on MADI you need to:

- Run EHX version 8.5 or above.
- Configure the panel audio in the EHX software and the MADI software as necessary.
- Ensure that the panel is fitted with a V-Series AES options module (see ***V-Series Panel User Guide*; *4.2.2 V-Series main panel rear connectors (AES 3)*** for more information.)

How the ports are configured in the software will depend on which MADI is used. See below for details.

### 6.5.1 Configuring audio over MADI, the general case

Most third party equipment (e.g. RME, Lawo) treats the AES (Audio Engineering Society) streams from a MADI as 32 linked pairs, A and B channel together. So in the general case, the following strategy should be used to route the AES streams:

In the card/port configuration screen in EHX, the panels should be configured to the odd numbered ports (taking the first port as 1) of the E-MADI card. The even numbered ports may be left unused (Empty), leaving the panel with only the main channel audio (channel A). See Figure 6.3.

**Note:** It is not necessary to define a block of panels as consecutive odd numbers. For example, ports 1,3,9,11,51 could be defined as panels, with all the other slots unused or used for other purposes if required.

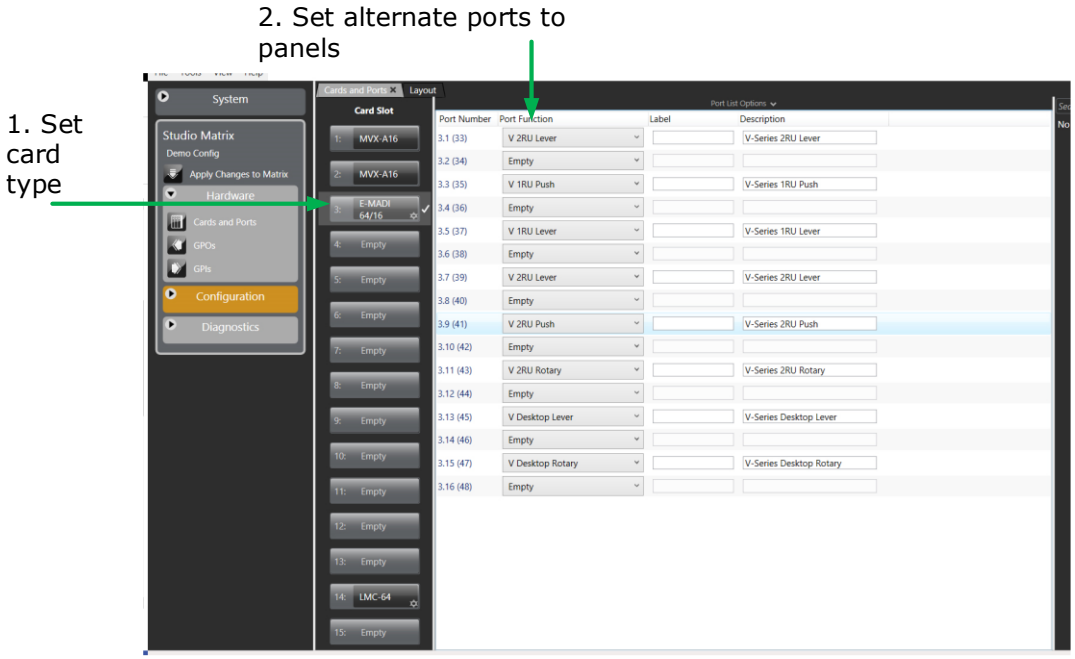


To configure binaural audio on V-series panels on a MADI card in EHX go to: **EHX>Hardware>Cards and Ports.**
This example shows how to configure ports for audio streamed in pairs, A and B.
Note that alternate ports have been set to accommodate paired audio streams.

**Figure 6-3 Setting port configuration to panels with third party MADI routers; general case**

## 6.5.2 Configuring audio over Optocore/ProGrid MADIs

Optocore/ProGrid MADIs have the advantage of allowing fully flexible audio routing.

Optocore/ProGrid interfaces allow each channel of the MADI to be routed individually to any channel on any destination node. The AES streams do not have to be routed and configured in pairs. The ProGrid equipment allows fully flexible routing and it is possible to mix close packed mono and conventional stereo pairs on one MADI interface. It is the routing matrix in the ProGrid equipment that is used to get the main panel port to the A channel of the AES interface.

For example, if ports 1,2,3,4,5,7,9,11… are defined as panels in EHX, the ProGrid must be used to ensure that the channels 1,2,3,4,5,7,9,11… are routed to and from the A channels of the AES interfaces.

Because of the free routing capabilities of the ProGrid, the routing of panel data is totally free format so it is possible, for example, to define stereo panels where the main and aux channels are not defined on adjacent ports of the MADI. See Figure 6.4.

**In all cases, when using a router such as ProGrid, ensure that the configuration of the E-MADI card and the configuration of the ProGrid matrix are consistent with each other.**

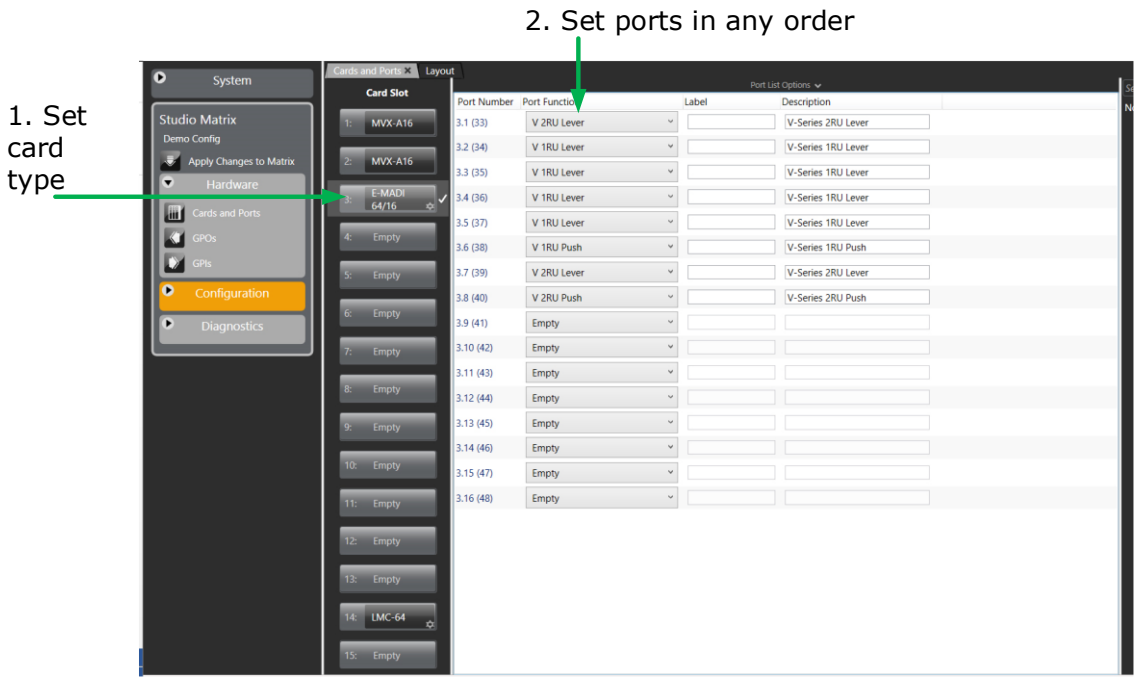


To configure V-series panels on a MADI card in EHX go to: **EHX>Hardware>Cards and Ports.**
This example shows how to configure ports for audio that is not streamed in pairs by the MADI interface (ProGrid). Note that ports do not have to be set to accommodate paired audio streams.

**Figure 6-4 Setting port configuration to panels with ProGrid routers**

## 6.6 Configuring binaural audio with E-MADI cards

When routing audio to a V-Series panel with a MADI64 card, the AES (Audio Engineering Society) audio streams can be set to operate binaurally (one channel to each headphone on a headset) using the main channel audio (A) and the auxiliary channel audio (B).

When setting up binaural audio over a V-Series panel with a MADI64 card you must:

- Configure the panel audio in the EHX software and the MADI software as necessary.
- Set the Audio Mixer screen option to display additional channels in the EHX user interface so they can be routed to the desired outputs.
- Use a headset with a minimum of a 5-pin input (use with an XLR5 or 7 adapter).

# 6.7 Configuring binaural panel audio in software

The main audio channel and the auxiliary audio channel need to be directed to the desired ports. This is achieved in the EHX software (**EHX/Hardware/Cards and Ports)**. How the two audio streams (channels A and B) are set up will depend on which MADI is used to connect the audio between the E-MADI64 card and the AES (Audio Engineering Society) module fitted to the V-Series panel.

## 6.7.1 Binaural audio over MADI, the general case

Most third party equipment (e.g. RME, Lawo) treats the AES streams from a MADI interface as 32 linked pairs, A and B channel together. So in the general case, the following strategy should be used to route the AES streams for binaural audio:

In the card/port configuration screen in EHX, the panels should be defined on the odd numbered ports (taking the first port as 1) of the E-MADI card. The even numbered ports should be set to 'Panel Aux' to accommodate the second channel of audio. See Figure 6.5.

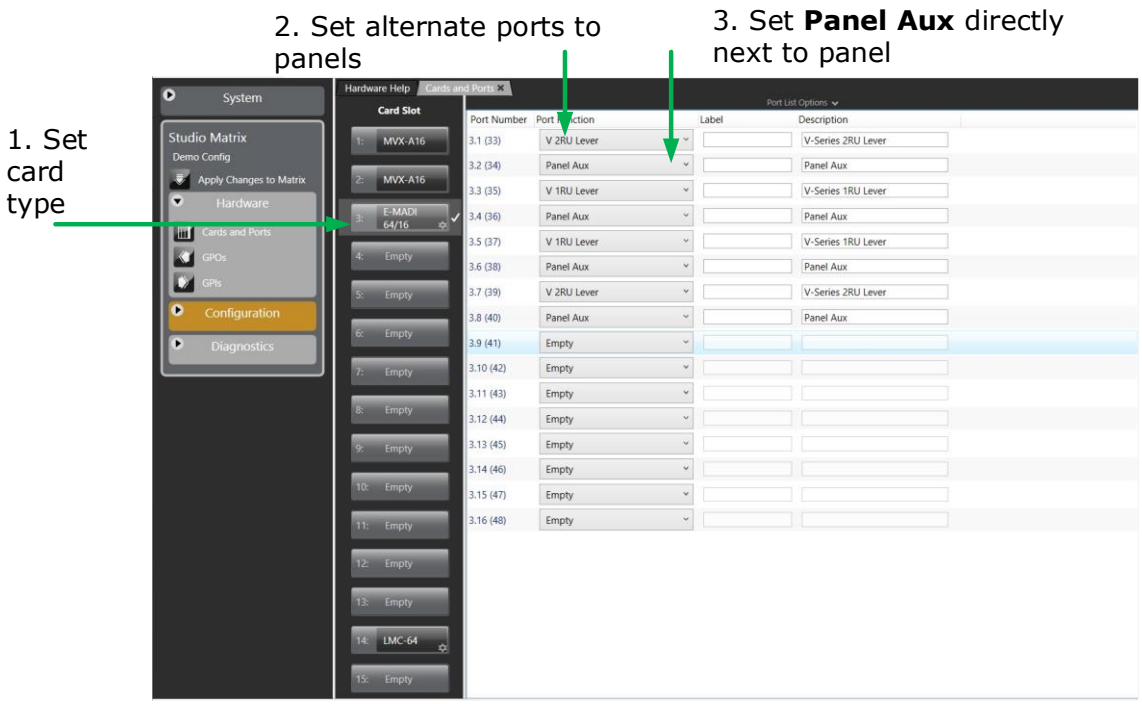


To configure binaural audio on V-series panels on a MADI card in EHX go to: **EHX>Hardware>Cards and Ports.**
This example shows how to configure ports for audio streamed in pairs, A and B. Note that alternate ports have been set to accommodate paired audio streams. To enable binaural audio, set '**Panel Aux**' next to the main audio stream.

**Figure 6-5 Configuring binaural audio for third party MADI routers**

## 6.7.2 Binaural audio over Optocore/ProGrid MADIs

Optocore/ProGrid MADIs allow each channel of the MADI to be routed individually to any channel of any destination. The AES streams do not have to be routed and configured in pairs. The ProGrid equipment allows fully flexible routing and it is possible to mix close packed mono and conventional stereo pairs on one MADI interface.

It is the routing matrix in the ProGrid equipment that is used to get the main panel port to the A channel of the AES interface. Also, it is the routing matrix in the ProGrid that is used to pair the audio channels as required.

**In all cases, when using a router such as ProGrid, ensure that the configuration of the E-MADI card and the configuration of the ProGrid matrix are consistent with each other.**

For example, if ports 1,2,3,4,5,7,9,11… are defined as panels in EHX, the ProGrid must be used to ensure that the channels 1,2,3,4,5,7,9,11… are routed to and from the A channels of the AES interfaces.

## 6.8 Set the EHX Audio Mixer screen option for binaural audio routing

1) Select **Configuration>Panels>Audio Mixer>Layout Basic Settings** in the EHX software and chose either **Layout Binaural coax/AES** or **Layout Binaural coax/AES + D25**. See Fig. 6.6.

Select **Configuration>Panels>Audio Mixer>Layout Basic Settings>Layout Binaural coax/AES**

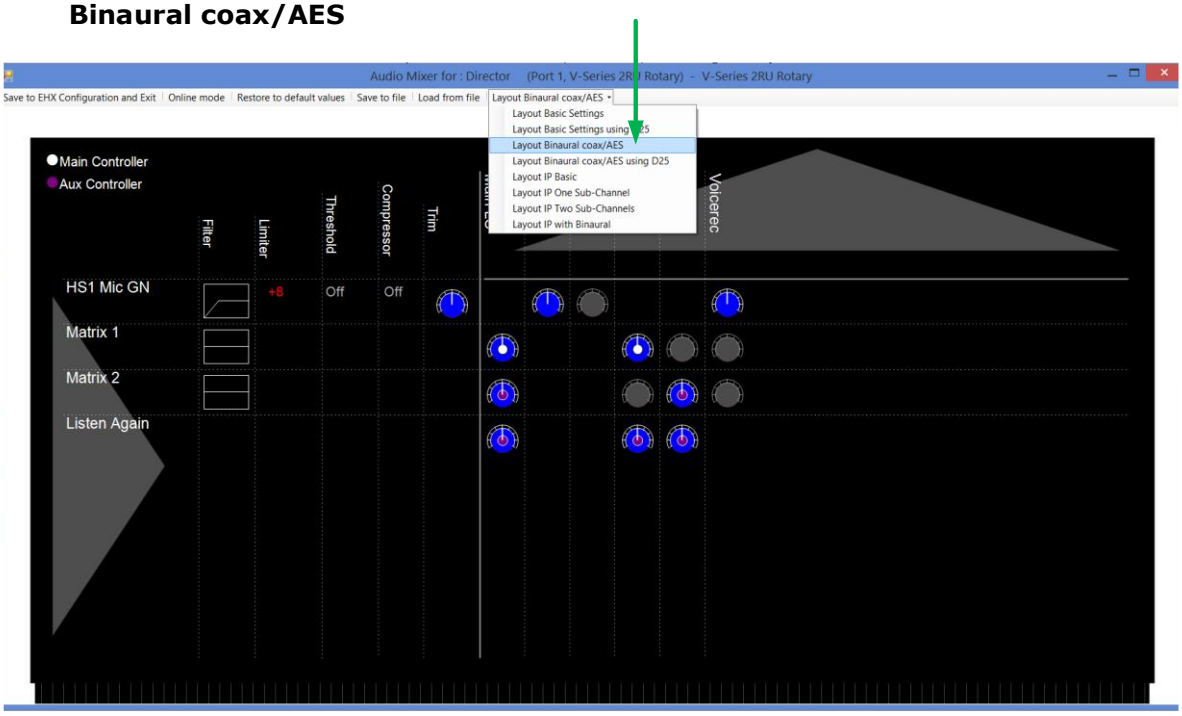


**Figure 6-6 Set binaural viewing options in the audio mixer**

2) Set audio routes as required (see ***EHX User Guide, 8. Audio Mixer*** for more information).

## 6.9 Upgrading the E-MADI64 card

The E-MADI64 card is both **centrally** upgradable (you can upgrade the E-MADI64 through the matrix, using EHX) and locally upgradeable, using Xilinx software, a PC and a Xilinx download cable.

For more information, see the ***Eclipse HX Upgrade Guide***.

# 7 E-FIB fiber card

This chapter describes how to connect Eclipse HX matrix using E-FIB fiber interface cards.
E-FIB fiber interface cards connect Eclipse HX matrices together to provide a high speed, dual redundant link to transfer audio samples and data between systems. These connections can be configured in various ways to provide protection against the loss of a link or a node.
Each fiber interface comprises:

- A front card with various controls and status indicators (including a reset button, status LEDs for power, processor function, card status, link status and link activity).

  **Note:** The link status and activity LEDs indicate whether there is activity on a link, whether the card is transmitting on a link and the error state of a link.

- A rear card with two Duplex LC Terminated fiber optic connectors (**TXVRA** and **TXVRB**). The fiber interfaces use **9/125µ Single Mode fiber optic cables**.

The standard maximum node length is 10km but other distances are available to special order.
If fiber interfaces are fitted to any matrix in a linked system **all** the linked matrices must be reset to ensure that all matrices correctly recognize the new hardware.

**Note:** For an overview of the Eclipse HX-Delta, see **3 Overview** in this document.

## 7.1 E-FIB front panel lights and controls

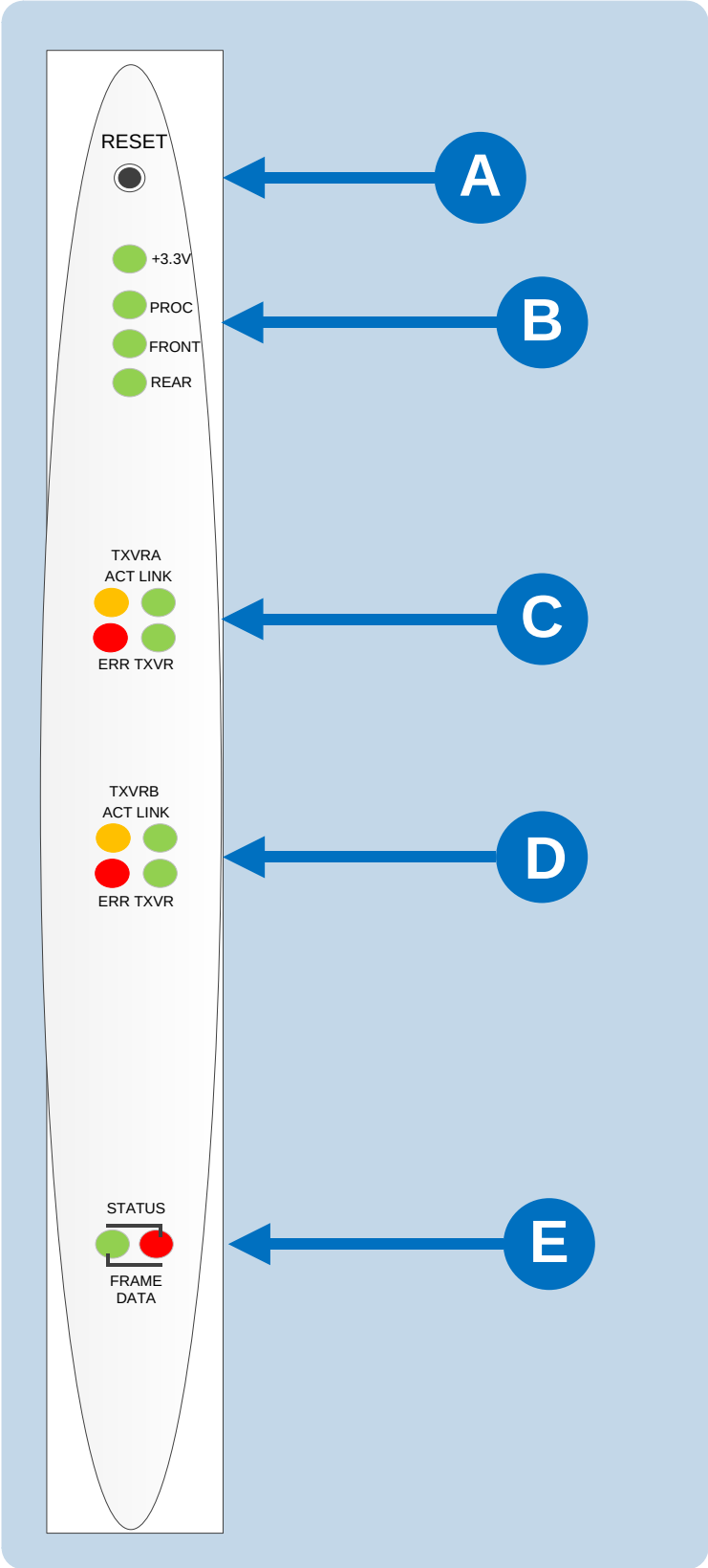


**Figure 7-1: E-FIB front panel lights and controls**

| Key to E-FIB front panel lights and controls | |
|---|---|
| **Feature** | **Description** |
| A | **RESET button**<br>Pressing the **RESET button** causes the card and all links to momentarily stop their current activity and to restart. The card's **matrix data** light goes off when the reset starts and comes back on when the reset is complete.<br>During the reset, configuration information downloads to the card and its connected matrices from the CPU card. If the entire system is operating except for one fiber card press the reset button for that card only.<br>**Tip:** *The reset button is slightly recessed from the front panel to prevent it from being accidentally pressed. A tool such as a bent paper clip is needed to press this button.* |
| B | **Power supply and Status lights**<br>**+3.3-Volt Power Supply LED**<br>The matrix's +3.3-volt power supply provides electric current to this green light. When lit, the light indicates that the +3.3-volt supply is present and supplying electric current to the card.<br>**Processor LED**<br>When lit the LED indicates that the fiber card on-board processor is running<br>**Front Card LED**<br>When lit indicates that the front card in functioning normally.<br>**Rear Card LED**<br>When lit indicates that the rear card is functioning normally. |
| C | **Primary Link Status LEDs**<br>These LEDs indicate the status and functioning of the primary (A) fiber optic link.<br>**Link LED**<br>This LED indicates whether a link has been established on the primary fiber optic circuit (transceiver A). When illuminated a link is present.<br>**TXVR LED**<br>This LED indicates when data is being transmitted on the primary circuit. It is illuminated when data is present on the circuit.<br>**ACT LED**<br>This LED is lit if the primary fiber optic circuit is active.<br>**ERR LED**<br>This LED will be illuminated if an error condition is detected on the primary fiber optic circuit. |
| D | **Secondary Link Status LEDs**<br>These LEDs indicate the status and functioning of the secondary (B) fiber optic link.<br>**Link LED**<br>This LED indicates whether a link has been established on the secondary fiber optic circuit (transceiver B). When illuminated a link is present.<br>**TXVR LED** |

| | |
|---|---|
| | This LED indicates when data is being transmitted on the secondary circuit. It is illuminated when data is present on the circuit.<br>**ACT LED**<br>This LED is lit if the secondary fiber optic circuit is active.<br>**ERR LED**<br>This LED will be illuminated if an error condition is detected on the secondary fiber optic circuit. |
| E | **Status LED**<br>The **red status LED** illuminates to indicate a failure in communication between the fiber card and the CPU card.<br>**Matrix Data LED**<br>The **green matrix data LED** illuminates to indicate successful communication between the fiber master card and the CPU card. |

**Table 18: E-FIB front panel lights and controls**

## 7.2 E-FIB rear panel lights and connectors

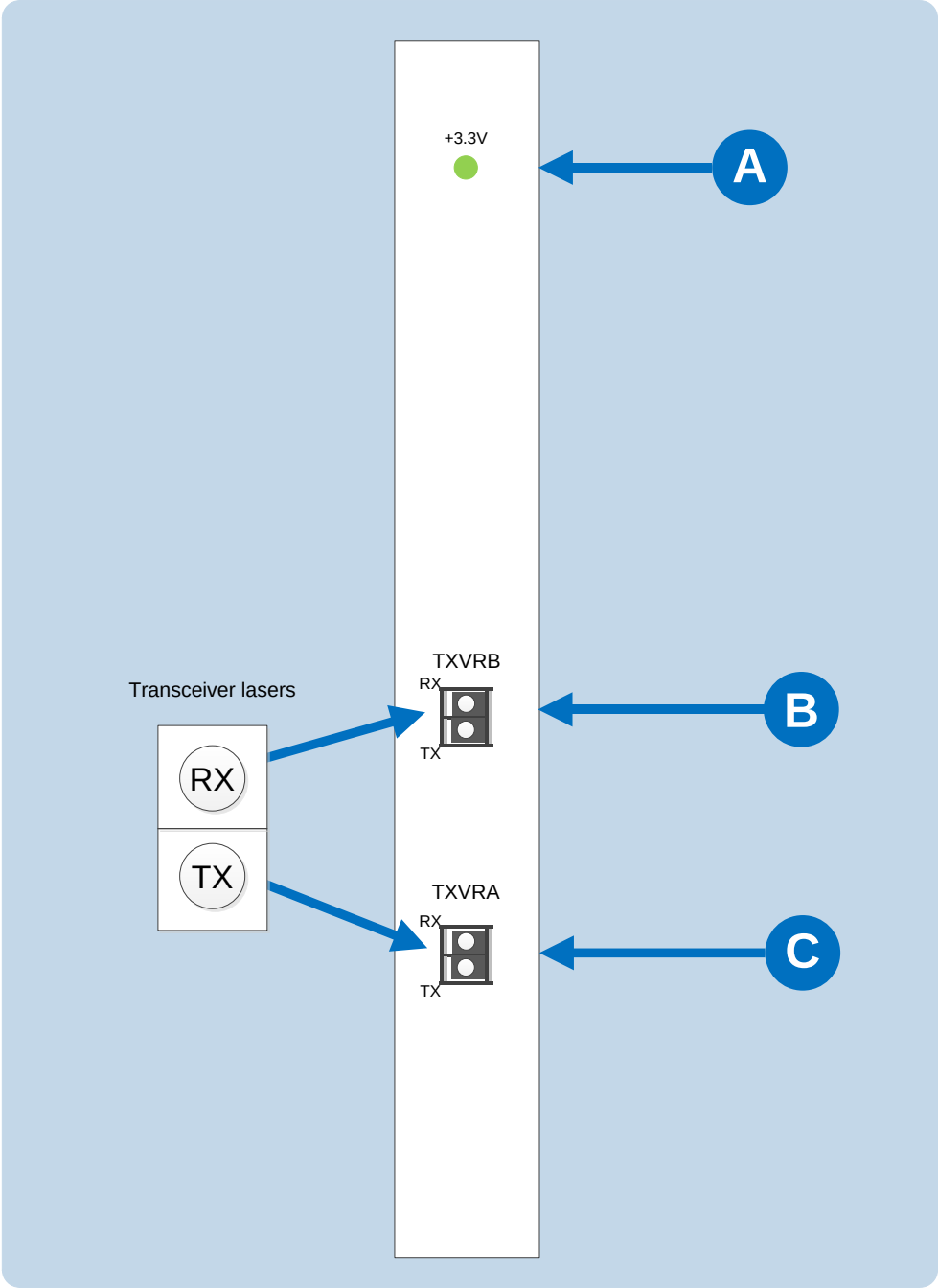


**Figure 7-2: E-FIB rear panel lights and connectors**

**Warning: Eye Safety**

***This laser based single mode transceiver is a Class 1 Laser product.*** *It complies with IEC 60825-1/A2:2001 and FDA performance standards for laser products (21 CFR 1040.10 and 1040.11) except for deviations pursuant to Laser Notice 50, dated July 26, 2001.*

*Normally a protective plug is fitted to the fiber connector to protect the connector from damage or the entry of foreign materials. The protective plug*

*should only be removed in order to fit the fiber optic cable. Replace the plug when the cable is unplugged.*

**Note:** **Primary** and **secondary** fiber ports are reversed with respect to the front panel indicators.

Care should be taken when connecting or disconnecting cables to ensure that they are connected correctly and **not reversed**.

| Key to E-FIB rear panel connectors | |
|---|---|
| **Feature** | **Description** |
| A | **+3.3-Volt Power Supply LED**<br>When this **green** LED is lit, the +3.3-volt power supply (supplied by the matrix) is present and supplying electric current to the card. |
| B | **Fiber transceiver with Duplex LC type connector.** The **TXVRB** connector is used for the secondary ring. |
| C | **Fiber transceiver with Duplex LC type connector**. The **TXVRA** connector is used for the main ring. |

**Table 19: Key to E-FIB rear panel connectors**

**Single mode 9/125µ fiber optic cable** should be used for connections and the matrices should be wired up with the system with the lowest I/P address being **system 1**.
The fiber optic cable for the primary and secondary circuits are plugged into the appropriate ports. An example showing three systems configured with a primary and secondary ring is shown in **Figure 7-3: Primary and redundant ring configuration**.

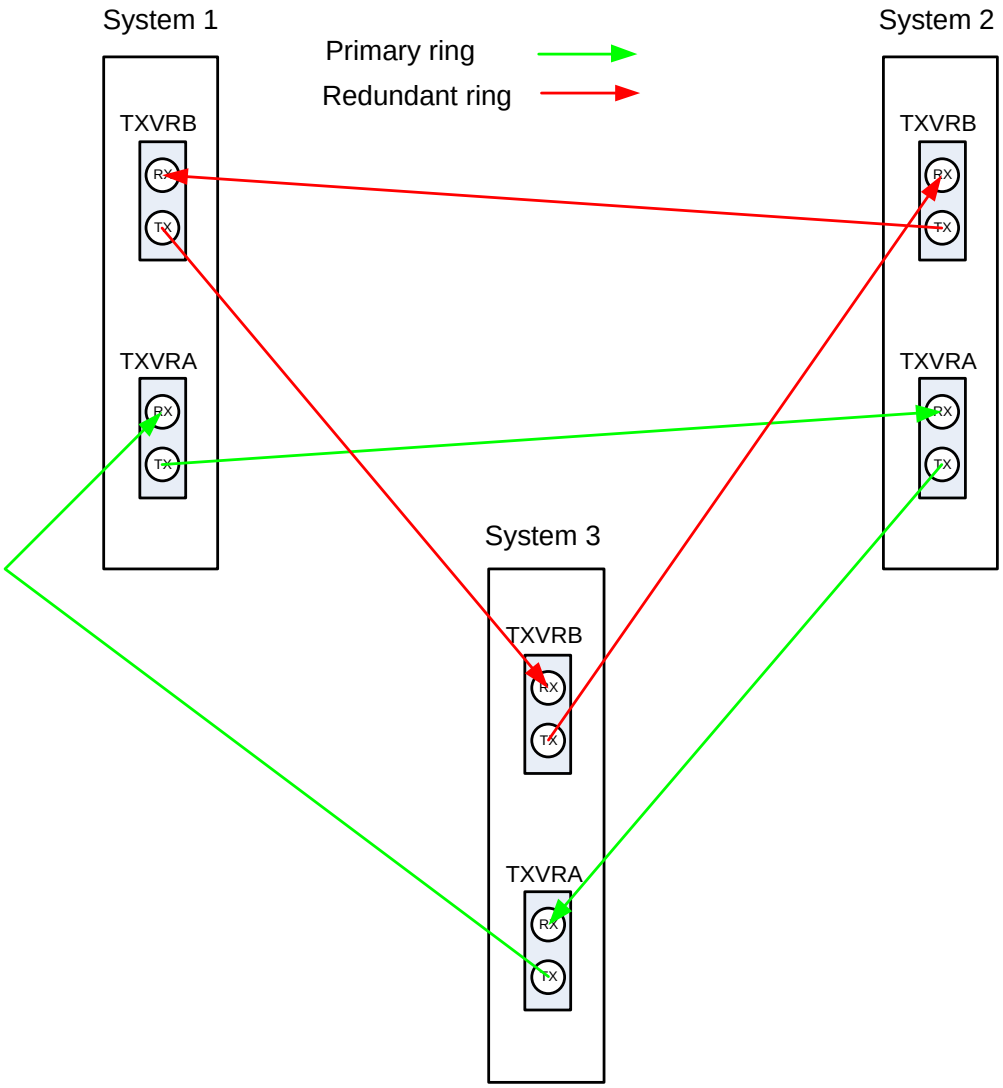


**Figure 7-3: Primary and redundant ring configuration**

## 7.3 Configuring a fiber optic connection

There are a number of ways that optical connections can be made between systems depending on the level of redundancy required.
When a break occurs in the fiber ring, a solid red status light will be shown at the fiber card downstream from the break and the link status LEDs may show **amber**. Other fiber cards will intermittently show **red**, as the ring attempts to recover. If the system layout is displayed by EHX the faulty links are shown in red.
In order to diagnose faults or switch between primary and secondary rings or between primary and backup fiber linking cards the **system monitoring screen** in EHX must be used.

**Note:** For more information about EHX, see your EHX documentation (including ***EHX Help*** integrated into your software).

# 7.4 Simplex fiber cabling

## 7.4.1 Single card set redundancy

In this scenario, each matrix contains one fiber-optic Linking card set (see **Figure 7-4: Ring topology: single card set redundancy***).*
This approach still affords fiber connection redundancy since each rear card houses two fiber-optic transceivers.

**Note:** In the absence of an **Uninterrupted Power Supply (UPS)**, this configuration will **not** protect against loss of the node or the matrix itself.

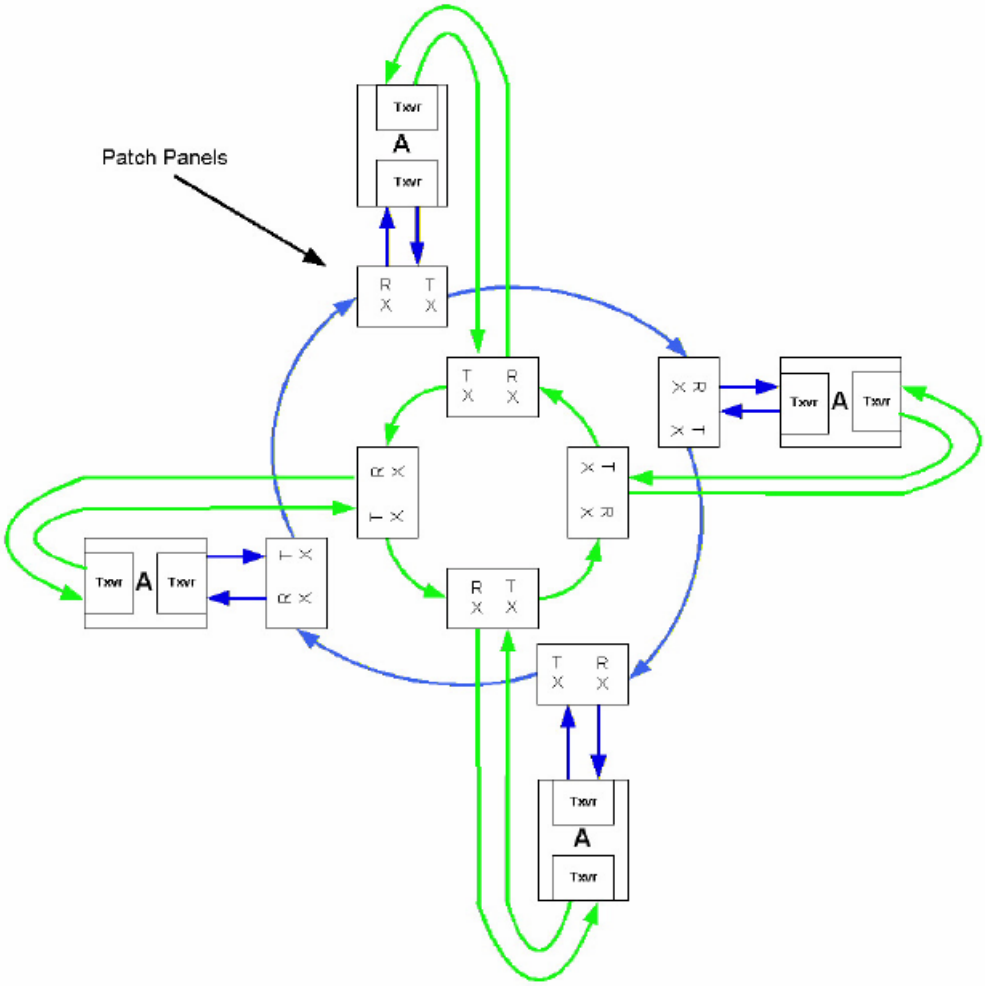


**Figure 7-4: Ring topology: single card set redundancy**

### 7.4.1.1 Loss of single fiber connection

When there is no break in the fiber connections the fiber audio will be routed using the primary ring.
If there is any connection failure on the primary ring and the secondary ring is intact then the fiber audio routing will move to the secondary ring.
The self-healing mechanism is performed automatically by the **Fiber Linking Card.**

Switching to the secondary ring will cause audio breaks or disturbances and temporary loss of crosspoint data.
If a single fiber connection is lost on both rings the nodes adjacent to the failures will loop-back their connections to the failed cables healing the rings. In the state the fiber audio will therefore be routed utilizing both the primary and secondary fiber rings.

**Note:** The Eclipse HX configuration software (EHX) will report any failures in the fiber connection system.

#### 7.4.1.2 Loss of a single node

If a node is lost on the ring the nodes adjacent to the failed node will loop-back their connections to the failed node healing the ring using the working remains of the ring. The configuration software (EHX) will report the failure.
This applies to the situation where the fiber card itself has failed rather than the matrix.

#### 7.4.1.3 Loss of two fiber connections

If two adjacent fiber connections are lost on the ring, this will be handled as for the loss of a single node where the nodes adjacent to the failed node will loop-back their connections to the failed node healing the ring.
The configuration software will report the failure correctly as two failed cables. If two non-adjacent fiber connections are lost on the ring the nodes adjacent to the failures will loop-back their connections to the failed cables healing the ring into 2 separate smaller rings. The configuration software will report the failure.

**Note:** In this instance the two sub-rings will be dependent on their Ethernet connections for configuration and data transmission but there will be no audio path between them.

#### 7.4.1.4 Loss of two nodes

If two adjacent nodes are lost on the ring this will be handled as for the loss of a single node where the nodes adjacent to the failed node will loop-back their connections to the failed nodes healing the ring. The configuration software will report the failure correctly as two failed nodes.
If two non-adjacent nodes are lost on the ring the nodes adjacent to the failures will loop-back their connections to the failed nodes healing the ring into 2 separate smaller rings. The configuration software will report the failure.

### 7.4.2 Dual card set redundancy

The fiber linking function supports Dual card set redundancy. Both **Card set A** and **Card set B** are fitted in each node of the ring. In this case each matrix contains two **Fiber-optic Linking card sets**.
This approach affords full redundancy, offering protection against component failure within a single Fiber-optic Linking Card Set

#### 7.4.2.1 Parallel operation

The cabling and operation of both cards sets is the same as described in **7.4.1 Single card set redundancy.**
All card set A units in the linked set are network together forming a redundant fiber ring. However additionally all card set B units are additionally networked together to form a parallel redundant fiber ring. There is no fiber linkage between these two parallel fiber networks.
During normal operation each matrix monitors the number of nodes that are reachable on each of the two fiber networks. When there is parity between card set A and card set B then card set A will be used to route audio to and from the matrix.

#### 7.4.2.2 Loss of fiber connections and nodes

As long all nodes are still deemed to be reachable on Card set A no switchover will be performed to Card set B.
Therefore, even if fiber connection issues on Card set A that a) result in a switch to the secondary ring (on Card set A) or b) result is a switch to loopback mode then Card set A will continue to be used to route audio to and from the matrix.
If sufficient fiber errors occur (either cabling or card failures) that result in the number of reachable nodes on Card set A dropping below that of Card set B then the matrix will switch to Card set B.
The currently active fiber card can be identified as it will flash its green status LED. The current backup (in active) fiber card will not illuminate its green status LED.

### 7.4.3 Fault tolerance

In all fault cases involving recoverable cable faults or loss of nodes on one or both rings the remaining nodes may experience audio breaks or disturbances and temporary loss of crosspoint information or data.
Audio and data from a failed node will not be available to the remaining nodes for the duration of the failure. When a ring with non-adjacent failures sub-divides into two sub-rings, audio and data from the failed nodes will **not** be available to the nodes in either sub-ring.
Audio and data will continue to be available to nodes within the same sub-ring but data may still be available to all nodes that are still functioning if there is an intact, independent Ethernet connection to those nodes.
If a Matrix, connected as a node of the fiber-optic link is reset, powered down or failed this will constitute a lost or failed node on both rings and this node will experience audio breaks or disturbances and loss of crosspoint information or data for up to 5 seconds after the fault condition is cleared or repaired.

#### 7.4.3.1 Single Card Set Redundant System: fiber redundancy

In all fault cases involving cable faults or loss of nodes on the ring the remaining nodes may experience audio breaks or disturbances and loss of crosspoint information or data.
When a ring with non-adjacent failures sub-divides into two sub-rings, audio and data from the failed nodes will not be available to the nodes in either sub-ring, audio will continue to be available to nodes within the same sub-ring but data

may still be available to all nodes that are still functioning if there is an intact, independent Ethernet connection to those nodes.
If a matrix, connected as a node of the fiber-optic link is reset, powered down or failed this will constitute a lost or failed node on the ring and this node will experience audio breaks or disturbances and loss of crosspoint information or data for up to 5 seconds after the fault condition is cleared or repaired.
An example of how a system with multiple matrices would be wired together is shown in **Figure 7-5: Example fiber-optic connection setup** in this document.

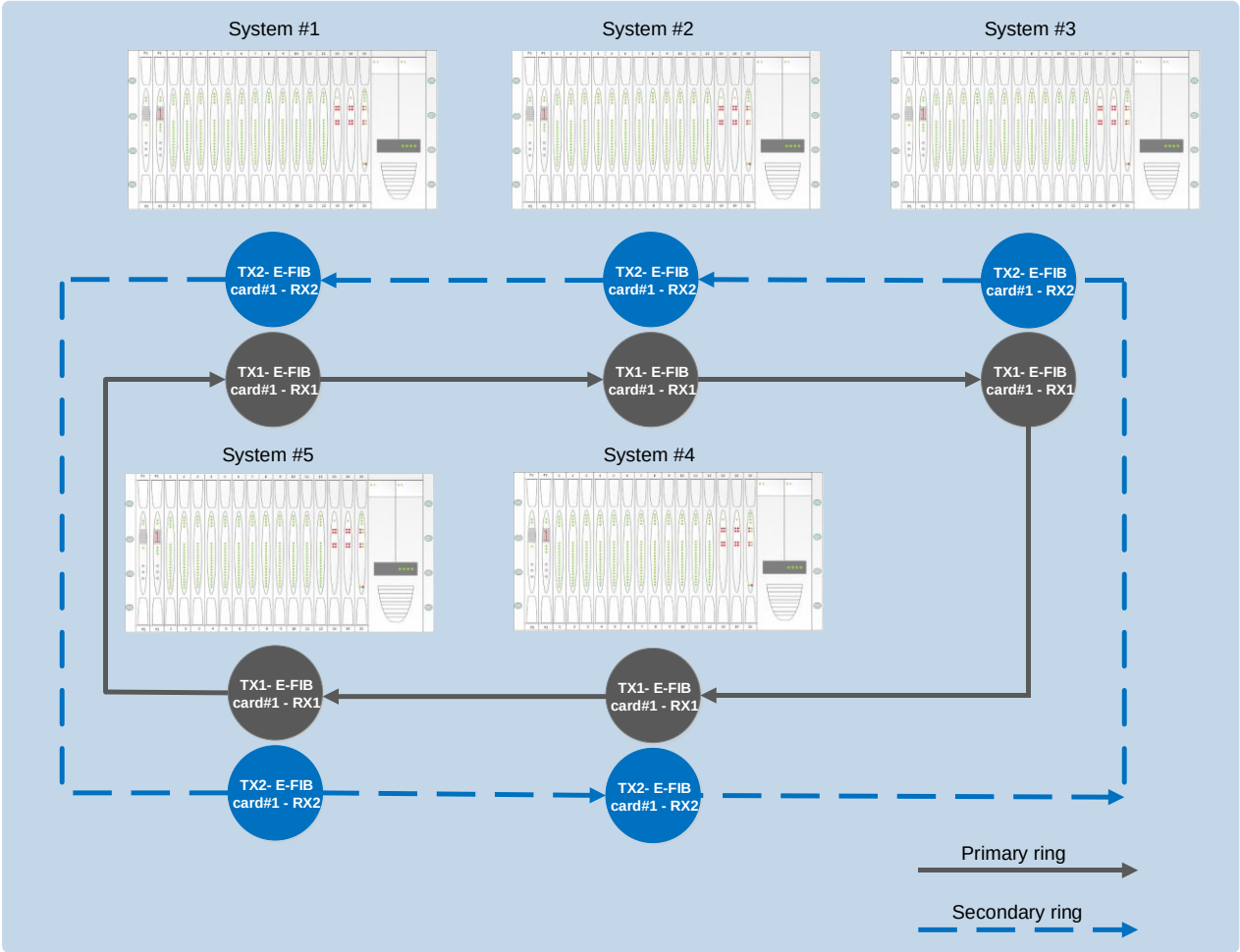


**Figure 7-5: Example fiber-optic connection setup**

# 8 E-QUE E1/T1 card

The E-QUE interface card allows you to connect the Eclipse matrix to **FreeSpeak/CellCom/** FreeSpeak II **antennas and FreeSpeak/CellCom/** FreeSpeak II **antenna splitters, E1 and T1 trunk lines and E1 direct lines**. The E-QUE interface cards must be fitted in the available slots nearest the bottom on the HX-Delta (furthest from the CPU cards). Up to four E-QUE interfaces can be fitted to an Eclipse HX-Delta matrix. The FreeSpeak/CellCom/ FreeSpeak II connection options supported are:

- Up to 8 x FreeSpeak/CellCom/ FreeSpeak II antenna direct connections per E-QUE interface.
- Up to 2 x FreeSpeak/CellCom/ FreeSpeak II splitter connections (up to 5 antennas each) per E-QUE interface.

Using all four E-QUE interfaces that can be fitted would allow up to 40 antennas and 200 beltpacks to be connected to a matrix. The E-QUE interface also provides facilities for Direct and Trunk connections using E1 protocol and Trunk connections over T1 protocol. There are:

- 30 audio channels on each of 2 connectors (60 channels in total) available in E1 mode.
- 24 audio channels on each of 2 connectors (48 channels per card in total) are available in T1 mode.

Each E-QUE interface consists of a front card with a reset button and various status indicators, and a rear card with eleven RJ45 ports giving eight standard ports, DECT sync in and out and a LAN port. Each E-QUE front card has status LEDs for power, port activity and LAN status. The port activity LEDs indicate whether there is a device connected to an E1 port and that a connection has been established between this port and the connected device.

**Note:** You do **not** require an Ethernet cable connected to the E-QUE card LAN port for the card to function correctly.

For an overview of the Eclipse HX-Delta matrix, see **3 Overview** in this document**.**

## 8.1 E-QUE front panel lights and controls

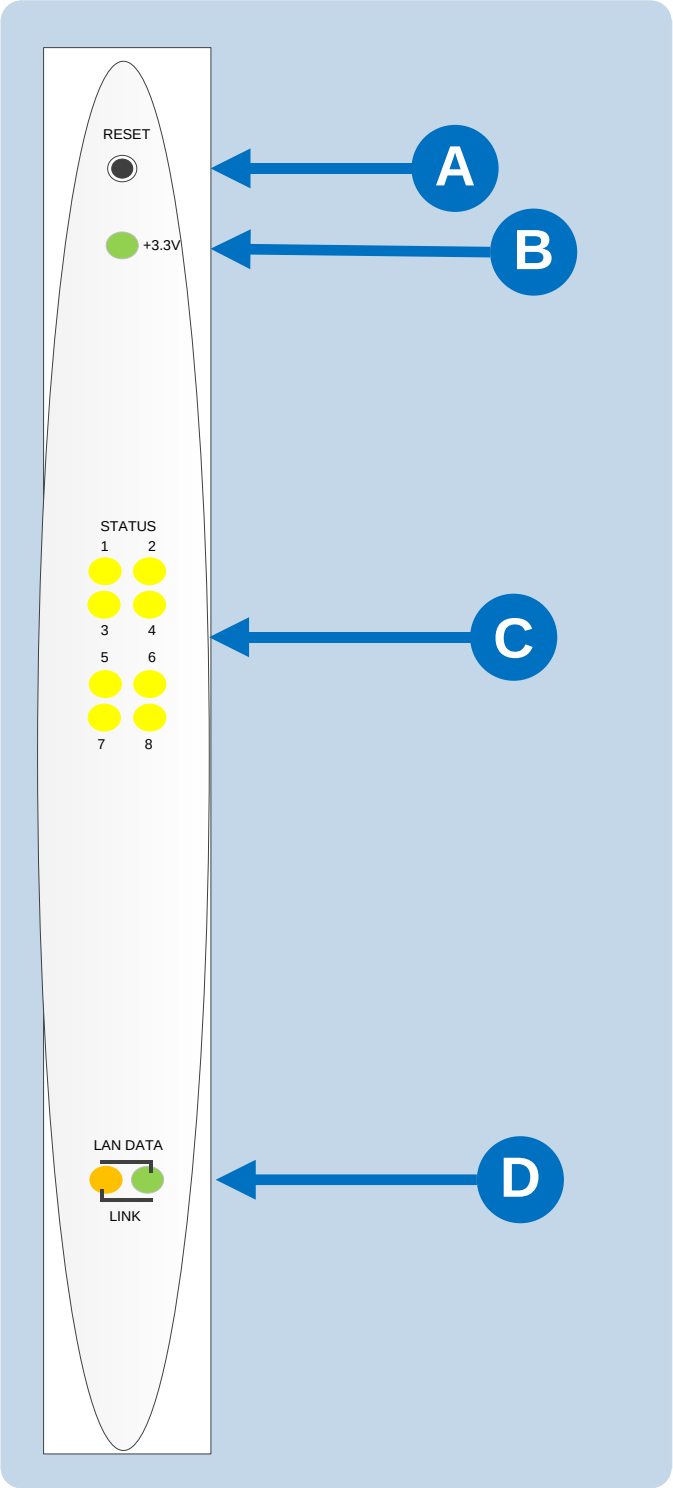


**Figure 8-1: E-QUE front panel lights and controls**

| Key to E-QUE front panel lights and controls | |
|---|---|
| **Feature** | **Description** |
| A | **RESET button**<br>Pressing the reset button causes the card and all links to momentarily stop their current activity and to restart.<br>During the reset, configuration information downloads to the card from the CPU card. If the entire system is operating except for one E-QUE card press the reset button for that card only.<br>**Tip:** *The reset button is slightly recessed from the front panel to prevent it from being accidentally pressed. A tool such as a bent paper clip is required to press this button.* |
| B | **Power supply lights**<br>**+3.3-Volt Power Supply Light**<br>The matrix's +3.3-volt power supply provides electric current to this green light. When lit, the light indicates that the +3.3-volt supply is present and supplying power to the card. |
| C | **Status lights**<br>When lit, a **status light** indicates successful communication between the<br>E-QUE card and a connected device such as an active antenna or splitter.<br>Each of the E-QUE card's 8 yellow **status lights** corresponds to one of 8 ports to which devices can be connected. |
| D | **LAN DATA light**<br>The **green LAN DATA** light illuminates to indicate there is data passing through the Ethernet port.<br>**LAN LINK light**<br>The **amber LAN LINK** light illuminates to indicate a connection to the LAN port. |

**Table 20: Key to E-QUE front panel lights and controls**

## 8.2 E-QUE rear panel connectors

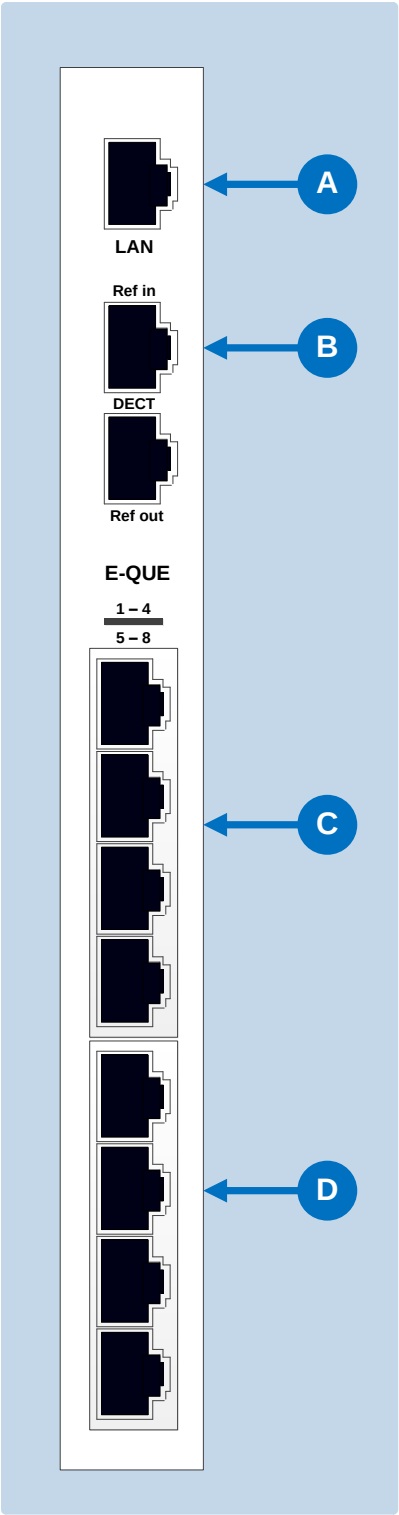


**Figure 8-2: E-QUE rear panel connectors**

| Key to E-QUE rear panel connectors | |
|---|---|
| **Feature** | **Description** |
| A | **LAN port (RJ-45)**<br>The LAN port is used for diagnostic purposes. |
| B | DECT sync ports:<br>**DECT Ref in**<br>**DECT Ref out** |
| C | **E1 / T1 Port 1 - 4(RJ-45)** |
| D | **E1 / T1 Port 5 - 8 (RJ-45)** |

**Table 21: Key to E-QUE rear panel connectors**

When multiple E-QUE cards are fitted in a rack, one of the cards generates a clock signal, which all other cards lock to, to ensure that all antennas remain in sync. The system is designed such that the uppermost card (seen from the front) is always the one which generates this signal.
This means that if the uppermost card is removed, or a new card is fitted above existing cards, the antennas will lose lock for a few seconds as the cards re-configure themselves and a new card starts generating the sync signal.
Where multiple connected matrices are used containing E-QUE cards the DECT reference ports are connected as a daisy chain between the matrices to ensure that the DECT signals are synchronized through all the E-QUE cards present in the matrices.

**Note:** Failure to connect the DECT sync signal between matrices will result in poor utilization of the DECT bandwidth, and the system may operate poorly in a congested RF environment.

*The LAN port is used for diagnostic purposes.*

## 8.3 E-QUE interface card applications

The E-QUE interface card may be used to connect:

- FreeSpeak/CellCom/ FreeSpeak II antennas and splitters to an Eclipse HX matrix.
- Provide E1 and T1 connections to other systems.

  **Note:** For more information about E1 and T1 cable pinouts and cable connections, see:

- **4.9 E1/T1 Matrix to Matrix straight cable connections** in this document**.**
- **4.10 E1 to FreeSpeak / CellCom / FreeSpeak II antenna** straight cable connection in this document***.***

### 8.3.1 FreeSpeak/CellCom/ FreeSpeak II application

The E-QUE interface cards can be configured for FreeSpeak/CellCom/ FreeSpeak II use in two modes, depending on whether antennas or splitters are to be connected.
If the E-QUE interface card is configured:

- **In Antenna mode** all eight E1/T1 ports can be used to connect up to eight antennas.
- **To support splitters**, only two ports are active (ports 1 and 5) allowing a maximum of two splitters to be connected. Each splitter can support up to five antennas.

When the E-QUE interface cards are used in FreeSpeak/CellCom/ FreeSpeak II mode, they cannot be connected to the antennas via third party equipment or via fiber as the antennas require the DECT sync signal and this will not be converted by third party equipment or fiber interfaces.
Three connections schemes are illustrated below.

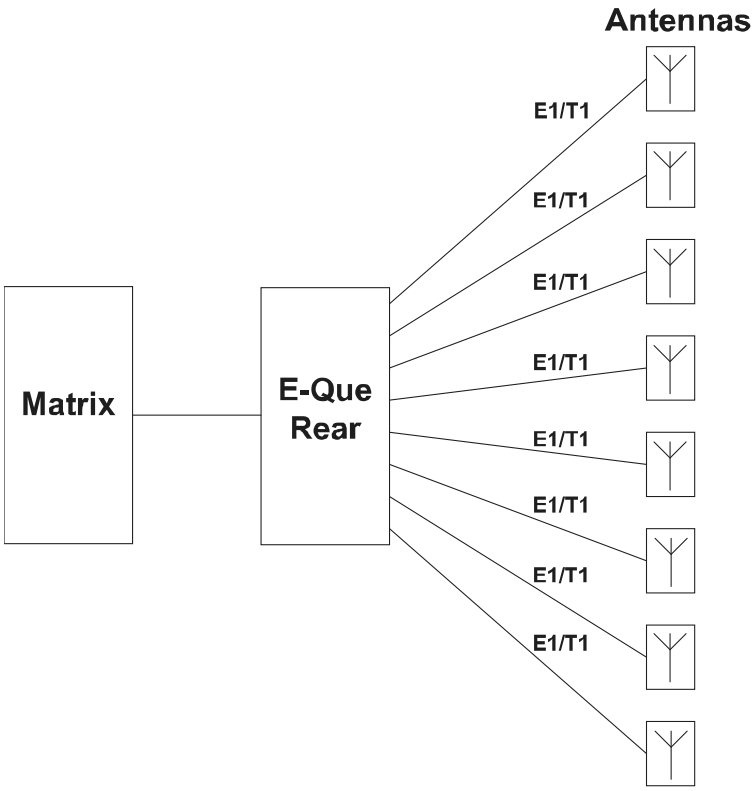


**Figure 8-3: E-QUE card antenna connection**

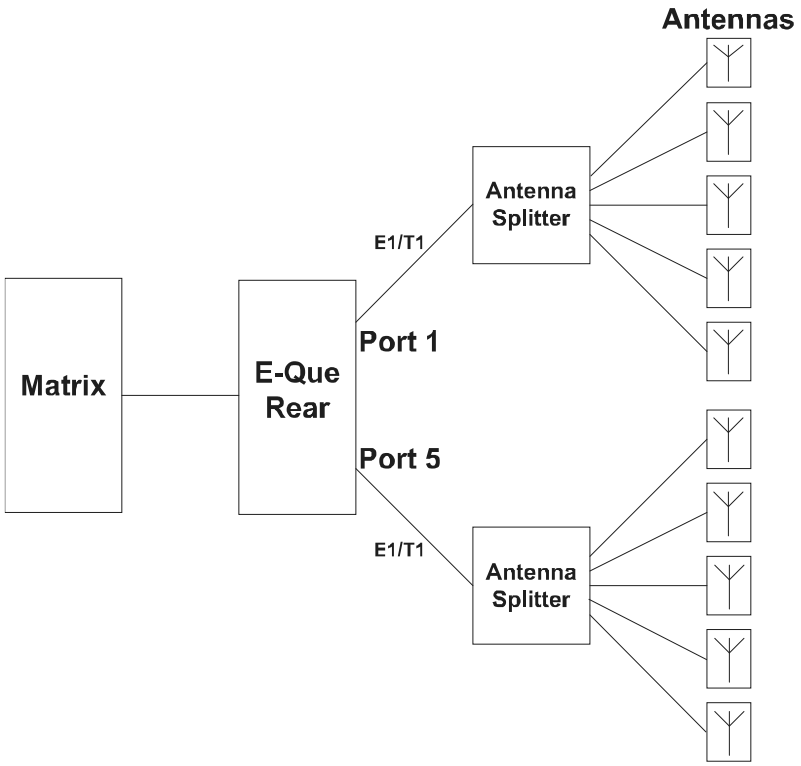


**Figure 8-4: E-QUE card splitter connection**

Each antenna can handle up to five beltpacks simultaneously and switch service between antennas under control of the matrix as the beltpack user moves around the site.
The DC In power connector is used to locally power the transceiver/antenna with the supplied universal power supply. Use of local power is always required when the transceiver/antenna is connected directly to the E-QUE rear card (rather than via a splitter), and may be required if the antenna is located more than 300 meters (925 feet) from a splitter. It is recommended even when the transceiver/antenna is closer whenever it is available and convenient.
Transceiver/antennas can be located up to **1,000 meters (3,200 feet)** using **24 AWG** cable or **up to 500 meters (1,600 feet)** using **26 AWG** cable over CAT5 cable from the base station avoiding expensive RF cable.

**Note:** It is recommended that shielded CAT5 cable is used for all wireless installations.

Where multiple matrices are networked together with antennas or splitters connected to
E-QUE interface cards on more than one matrix the E-QUE interfaces should have the DECT Sync links between matrices to ensure the correct operation of the FreeSpeak/CellCom/ FreeSpeak II system.
Multiple E-QUE interface cards within a single matrix do not require external DECT sync cables, connected as the signal uses the backplane.

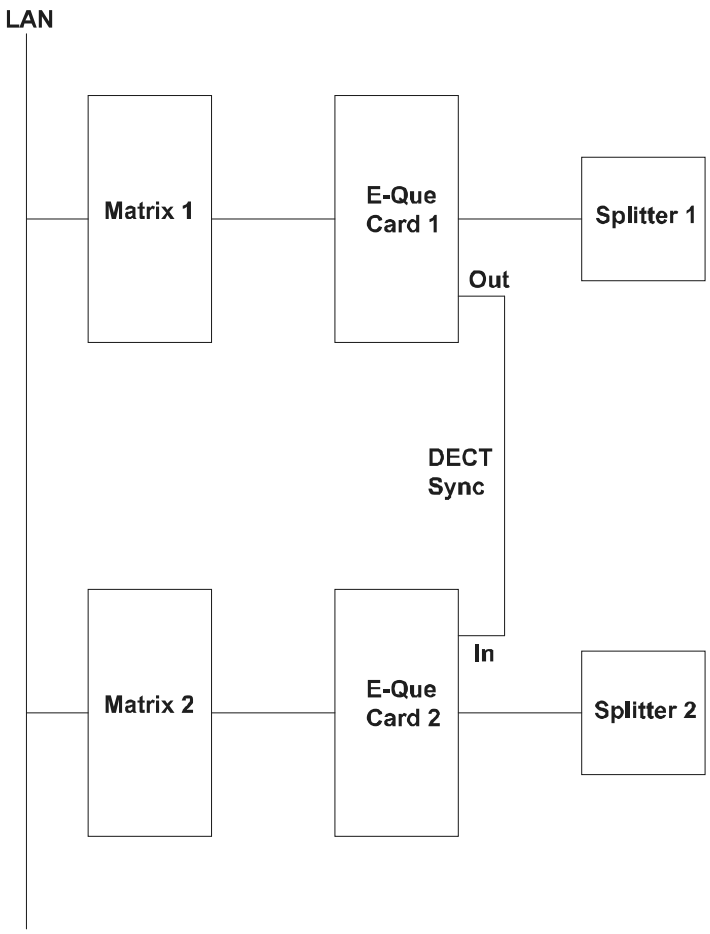


**Figure 8-5: Multiple matrices with DECT Sync Interconnect**

**Note:** All connections are made using CAT5 cable and it is recommended that shielded cable is used.

**Note:** If an E-QUE interface is fitted in the matrix with antennae or splitters connected and active inserting a second E-QUE interface above the first interface (seen from the front) will cause a temporary loss of audio to beltpacks using the original E-QUE interface (usually for about 10 seconds). The beltpacks do not go offline and signalization is not lost.

## 8.4 E1 Trunk and Direct Modes

The E-QUE interface can be used for both direct E1 to E1 port connections or to provide trunk linking via a network between systems. The E1 connections can be made between Eclipse systems or between Eclipse systems and compatible third-party equipment. E1 mode provides 30 channels of G.722 or G.711 encoded audio available on each of ports 1 and 5, giving 60 channels per card. The **E1 specifications** are:

- HDB3 Encoding.

- Long Haul Receive Signal Level.
- E1 120 Ohm Transmit Pulse Amplitude.
- Balanced.
- 120 Ohm Line Impedance.
- No Signaling.
- G.722 or G.711 64 kbit/s Audio Encoding.
- Tx Clock locally generated.
- Rx Clock Line Recovered.

**Figure 8-6: Matrix to Matrix direct E1 Trunking** shows E1 trunking using a direct connection between the matrices using a CAT5 crossover cable. The E-QUE interface should be set to **E1 Direct** in EHX hardware setup.

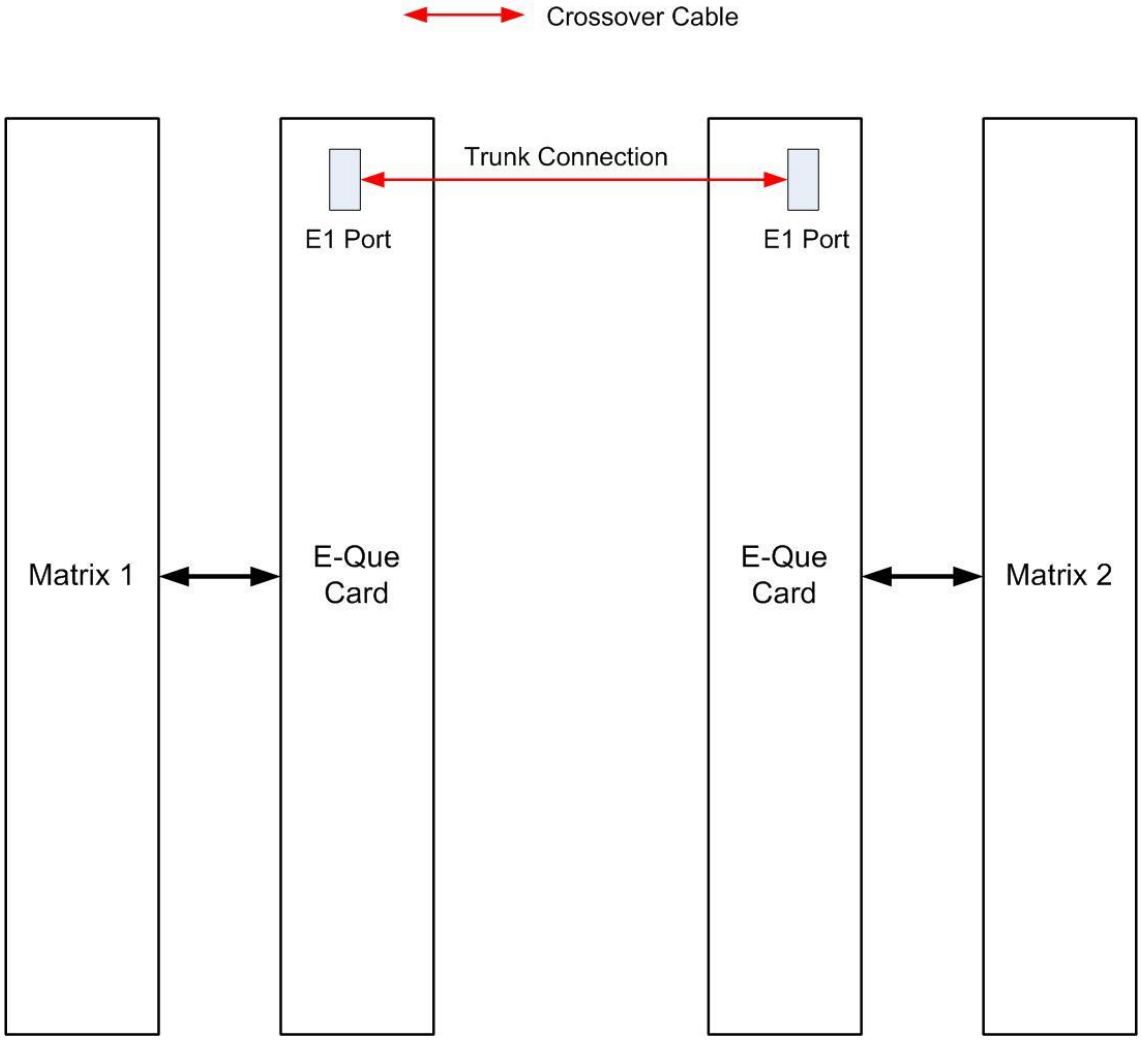


**Figure 8-6: Matrix to Matrix direct E1 Trunking**

E1 trunking between matrices can also be achieved over an E1 network, as shown in **Figure 8-7: E1 Trunking with an E1** Network.
In this case E1 ports 1 and 5 of the E-QUE interface are connected using standard straight-through CAT5 cables rather than crossover CAT5 cables.

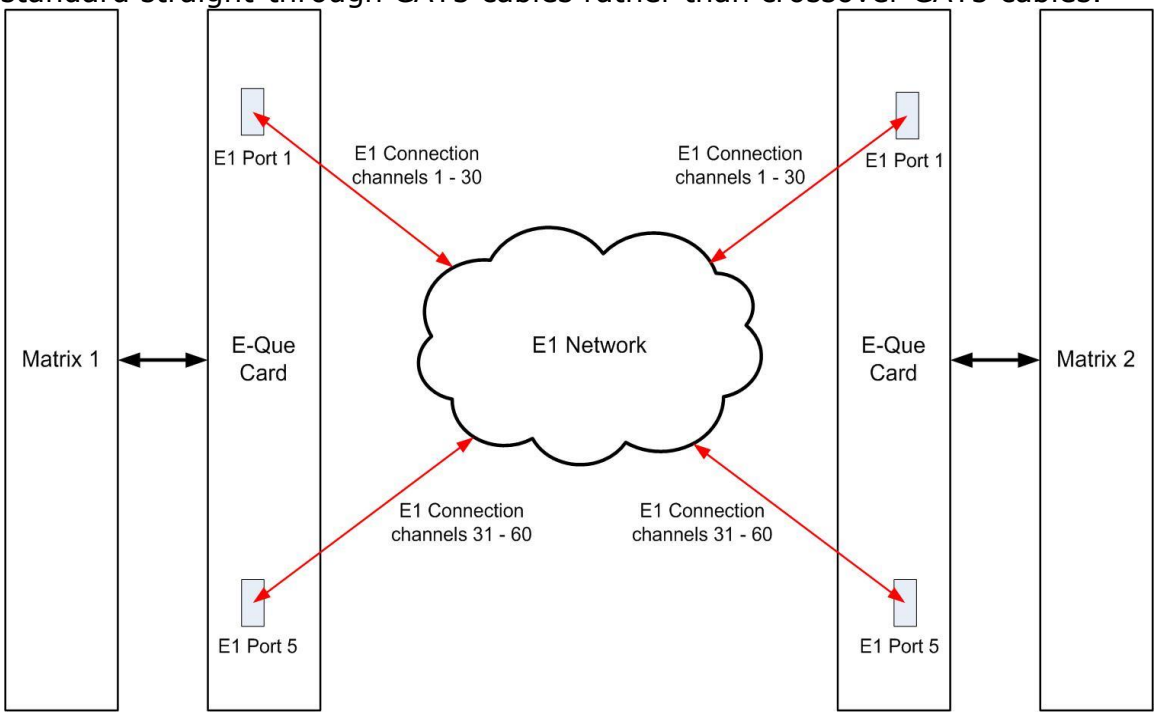


**Figure 8-7: E1 Trunking with an E1 Network**

The E-QUE interface can also be used to connect the matrix to third party equipment using E1 port 1 or 5.

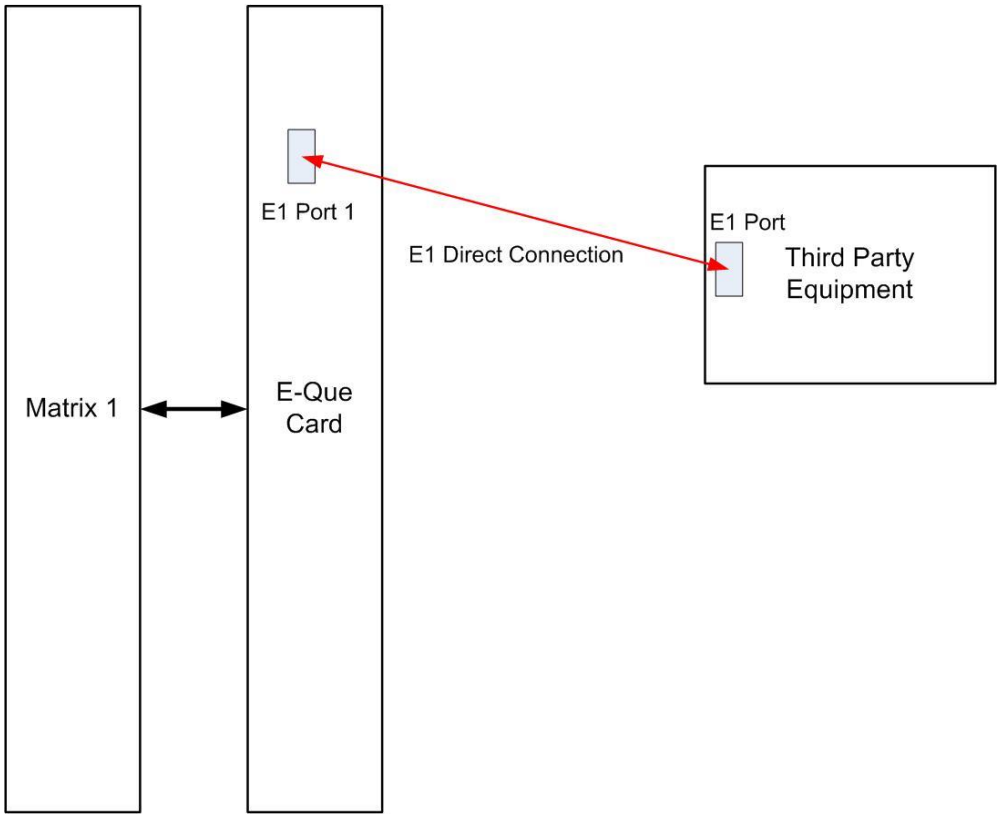


**Figure 8-8: Matrix to Third Party E1 connection**

The CAT5 cable connecting the E1 port on the E-QUE rear card may be a crossover cable or a straight-through cable depending on the requirements of the third party equipment. The E-QUE interface should be set to **Direct** in EHX.

## 8.5 T1 trunking

The E-QUE interface card can provide T1 trunking between Eclipse systems and between Eclipse systems and compatible third-party equipment.
T1 mode provides 24 channels of G.722 or G.711 encoded audio are available on each of ports 1 and 5, giving 48 channels per card.
The T1 trunking specifications are:

- B8ZS Encoding.
- Extended Super Frame.
- Long Haul Receive Signal Level.
- T1 Long Haul (LBO 0 dB) Transmit Pulse Amplitude.
- Balanced.
- 120 Ohm Line Impedance.
- No Signaling.

- G.722 or G.711 64 kbit/s Audio Encoding.
- Tx Clock locally generated.
- Rx Clock Line Recovered.

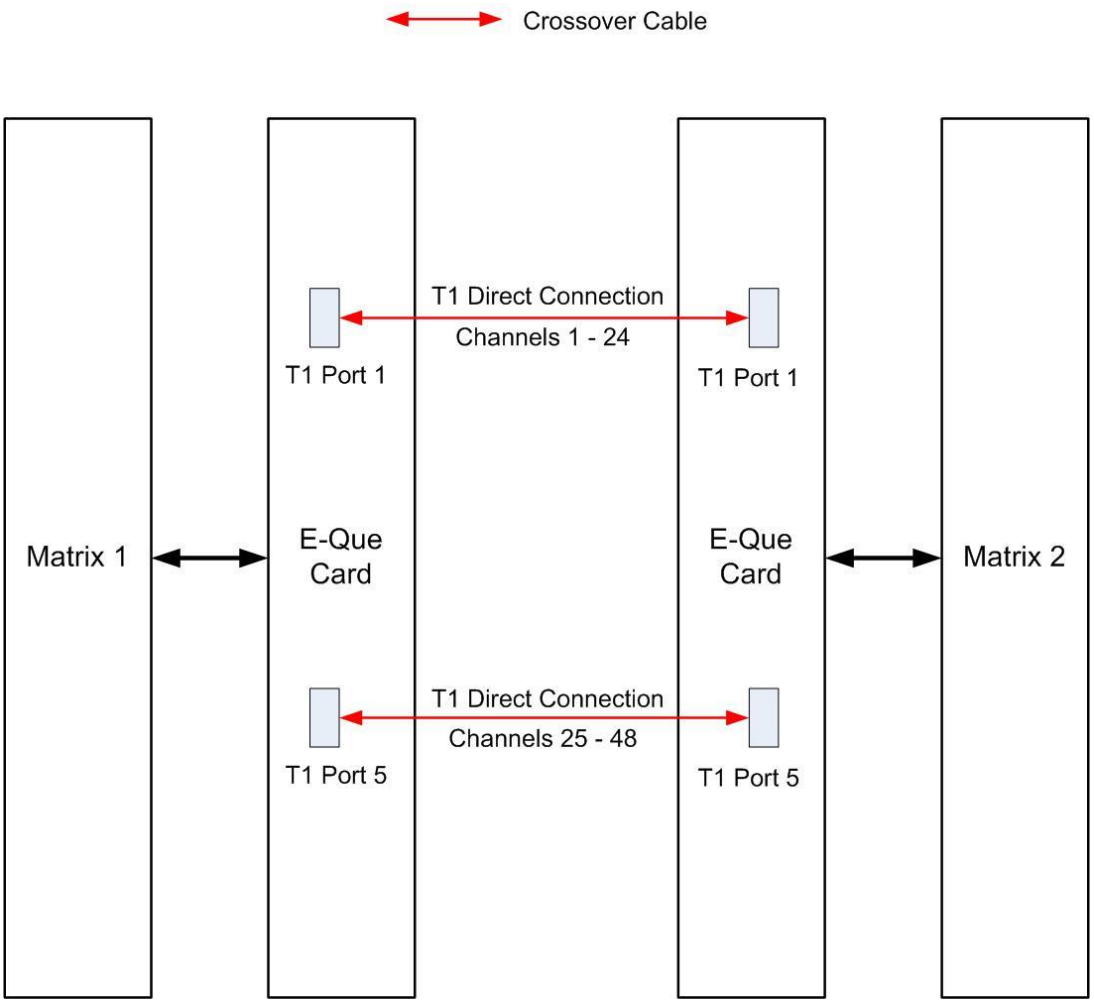


**Figure 8-9: Matrix to Matrix T1 Trunking**

T1 trunking between matrices can also be achieved over an E1 network as shown in **Figure 8-10: T1 Trunking using an E1** Network**.**
In this case T1 ports 1 and 5 of the E-QUE rear card are connected using standard straight-through CAT5 cables rather than crossover CAT5 cables.

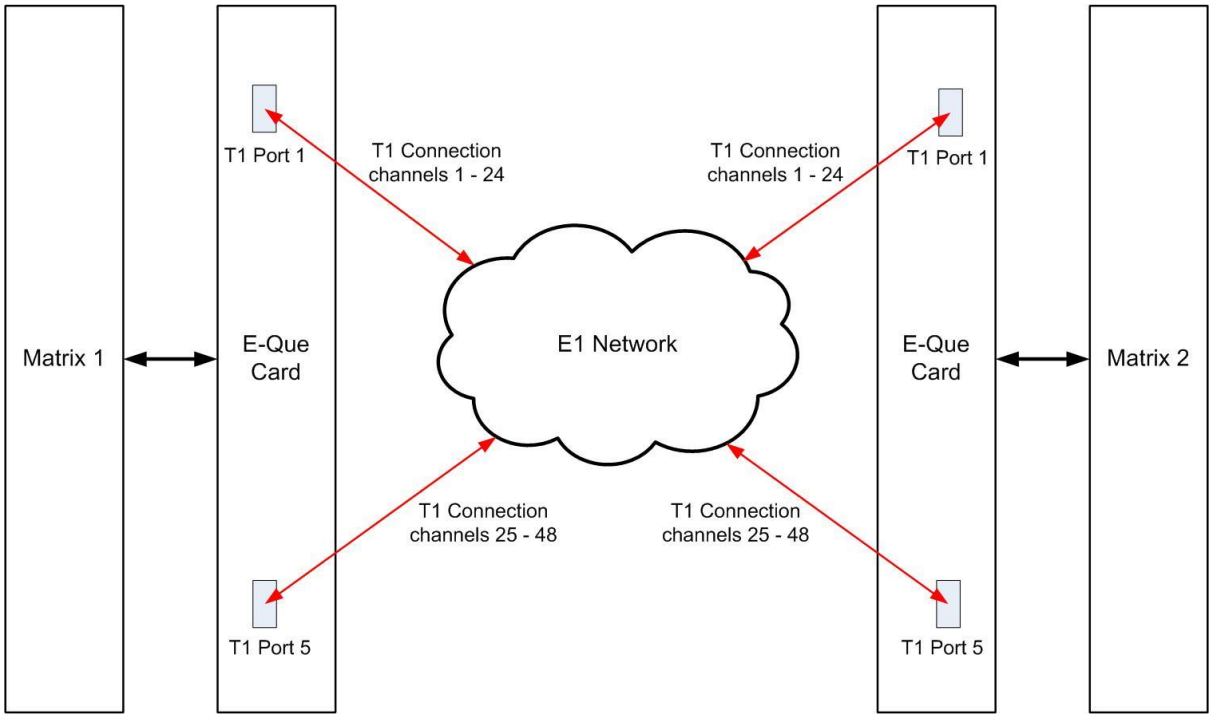


**Figure 8-10: T1 Trunking using an E1 Network**

## 8.6 Trunking failover

Where the E1/T1 trunking has been configured with redundant trunks audio will be switched from the primary trunk to the backup trunk when a failure is detected.

When failover occurs from primary to backup there will be a three second audio break on any route running over the trunk.

If the trunk routing is later switched back from the backup trunk to the primary trunk there will be no loss of audio.

# 9 IVC-32 card for IP-based connections

The **IVC-32 (*Instant Voice Communication)* interface card** provides the Eclipse HX-Delta with connectivity over IP to **V-Series IP panels and Concert servers**.
Each IVC-32 interface card comprises:

- A front card with a reset button and various status indicators (including status LEDs for power, port activity and LAN status).

  **Note:** The port activity LEDs are not active on the IVC-32 front card as the E1/T1 ports are not used.

- A rear card with eleven RJ-45 ports giving eight E1/T1 ports (not used), DECT sync in and out (not used) and a LAN port used for the IP connection.

  **Note:** An Ethernet cable **must** be connected to the IVC-32 interface LAN port for the card to function correctly.

*For an overview of the Eclipse HX-Delta, see* **3 Overview** in this document**.**

## 9.1 IVC-32 front panel lights and controls

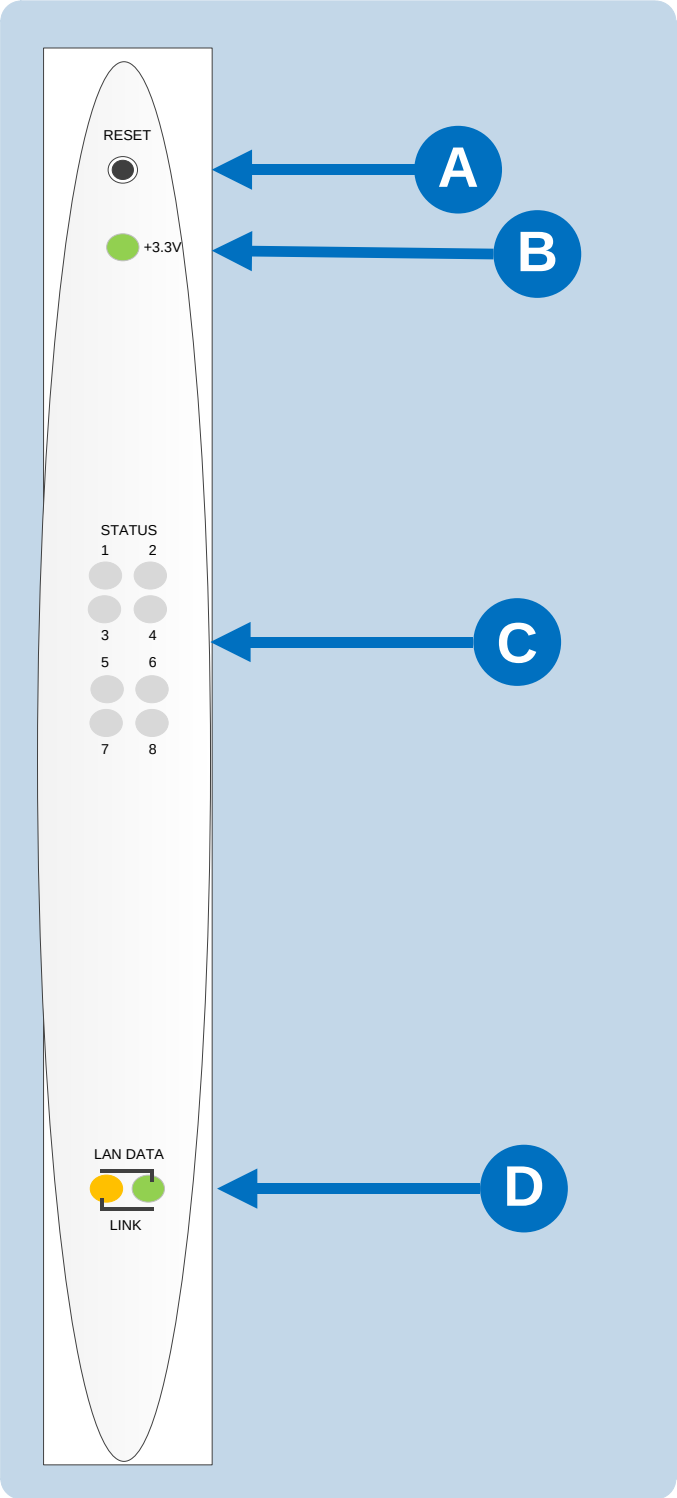


**Figure 9-1: IVC-32 front panel lights and controls**

| Key to Figure 41: IVC-32 front panel lights and controls | |
|---|---|
| **Feature** | **Description** |
| A | **RESET button**<br>Pressing the reset button causes the card and all links to momentarily stop their current activity and to restart.<br>During the reset, configuration information downloads to the card from the CPU card. If the entire system is operating except for one IVC-32 interface card, press the reset button for that card only.<br>**Tip:** *The reset button is slightly recessed from the front panel to prevent it from being accidentally pressed. A tool such as a bent paper clip is required to press this button*. |
| B | **Power supply light**<br>**+3.3-Volt Power Supply Light**<br>The matrix's +3.3-volt power supply provides electric current to this green light. When lit, the light indicates that the +3.3-volt supply is present and supplying power to the card. |
| C | **Status lights**<br>When lit, a yellow **status light** indicates IP communication between the card and E1/T1 connected devices. The first status light represents the first four connected panels, the second the next four panels, and so on.<br>Under normal circumstances, however, E1/T1 devices are **not connected** to an IVC-32 interface card, which means that these lights are **normally inactive**. |
| D | **LAN DATA light**<br>The **green LAN DATA** light illuminates to indicate there is data passing through the Ethernet port.<br>**LAN LINK light**<br>The **amber LAN LINK** light illuminates to indicate a connection to the LAN port. |

**Table 22: Key to IVC-32 front panel lights and controls**

## 9.2 IVC-32 rear panel connectors

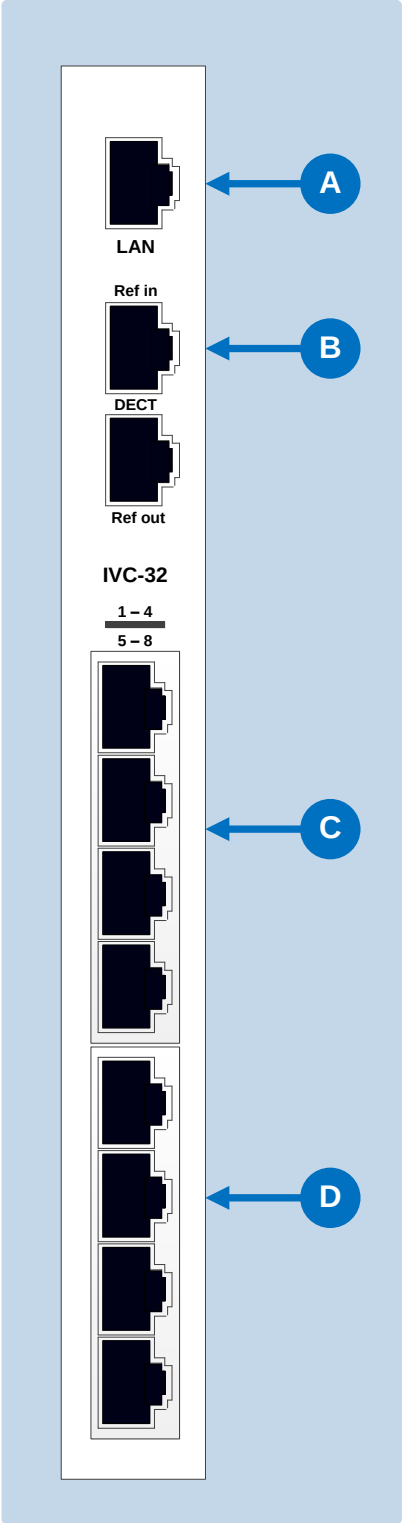


**Figure 9-2: IVC-32 rear panel connectors**

| Key to IVC-32 rear panel connectors | |
|---|---|
| **Feature** | **Description** |
| A | **LAN port (RJ-45)** |
| B | DECT sync ports:<br>**DECT Ref in (Not used)**<br>**DECT Ref out (Not used)** |
| C | **E1 / T1 Port 1 - 4 (Not used)** |
| D | **E1 / T1 Port 5 - 8 (Not used)** |

**Table 23: Key to IVC-32 rear panel connectors**

**Note:** The E1/T1 and DECT ports are **not used** on the IVC-32 interface and **should not be connected.**

## 9.3 IVC-32 interface applications

The IVC-32 interface may be used to connect:

- V-Series IP panels to an Eclipse matrix.
- Different Eclipse HX Matrices to each other using IP linking and trunking.
- Provide a link to a Concert Instant Voice Router (IV-R) server.

### 9.3.1 V-Series IP Panels

V-Series panels with V5.1 or later software may be enabled to communicate with an Eclipse HX-Delta matrix over an IP network using the IVC-32 interface card.
The advantage of using IP communication is that it enables remote panels to communicate over an existing local (LAN) or wide area (WAN) network rather than requiring a dedicated link.

### 9.3.2 IP linking and trunking

The Eclipse IVC-32 cards allow directs and trunks over IP network infrastructure. All IP trunks and directs can be compared directly to 4-wire trunks and directs. They consist of:

- A single duplex audio channel
- A known start point and end point

Links have to be made over IP before the trunk/direct can be used.

### 9.3.3 Concert Users

The IVC-32 interface will allow Concert users to establish audio links with users on the Eclipse matrix via the Concert IV-R server.
This server will provide a link over IP between Concert users and the Eclipse matrix. Concert users cannot connect directly to the IVC-32 interface card.
Concert users communicate with Eclipse users using a soft-panel, rather than the main Concert Client application.
This soft panel is configured using the EHX configuration software and the configuration information is uploaded to the Concert user's soft-panel on connection to the matrix.

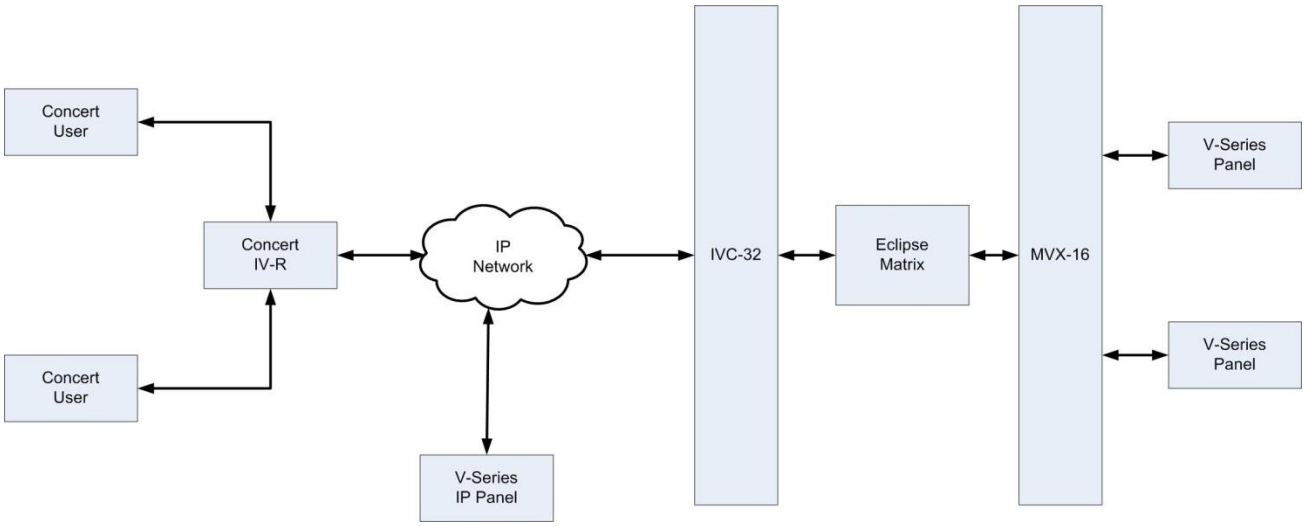


**Figure 9-3: IP communication using an IVC-32 interface card**

# 10 LMC-64 metering card

The **Level Meter Card (LMC-64) interface card** enables the Eclipse HX-Delta to provide audio level metering for Production Maestro Pro over a network.

Each LMC-64 interface card can meter up to **64 virtual partylines (conferences)** and **four-wire ports**.

The LMC-64 interface comprises:

- A front card with a reset button and various status indicators (including status LEDs for power, port activity and LAN status).

  **Note:** The port activity LEDs are **inactive** on the LMC-64 front card as the E1/T1 ports are **not** used.

- A rear card with eleven RJ45 ports giving eight E1/T1 ports (not used), DECT sync in and out (not used) and a LAN port used for the IP connection.

**Note:** An Ethernet cable must be connected to the LMC-64 interface LAN port for the card to function correctly.

For an overview of the Eclipse HX-Delta, see **3 Overview** in this document.

## 10.1 LMC-64 front panel lights and controls

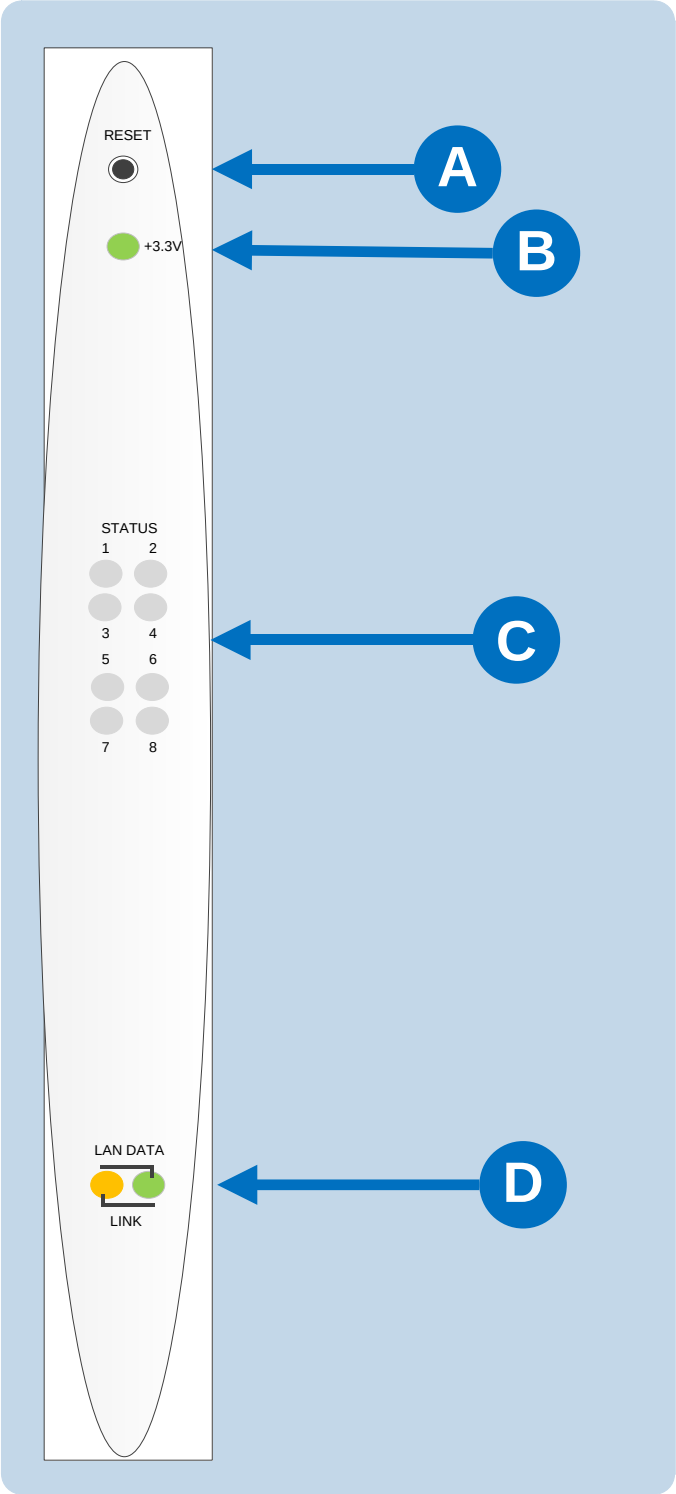


**Figure 10-1: LMC-64 front panel lights and controls**

| Key to IVC-32 front panel lights and controls | |
|---|---|
| **Feature** | **Description** |
| A | **RESET button**<br>Pressing the reset button causes the card and all links to momentarily stop their current activity and to restart.<br>During the reset, configuration information downloads to the card from the CPU card. If the entire system is operating except for one LMC-64 interface press the reset button for that card only. **Tip:** *The reset button is slightly recessed from the front panel to prevent it from being accidentally pressed. A tool such as a bent paper clip is required to press this button.* |
| B | **Power supply light**<br>**+3.3-Volt Power Supply Light**<br>The matrix's +3.3-volt power supply provides electric current to this green light. When lit, the light indicates that the +3.3-volt supply is present and supplying power to the card. |
| C | **Status lights (normally inactive)**<br>When lit, a **yellow status light** indicates successful communication between an E1/T1 port on the LMC-64 interface and a connected E1/T1 device such as an active antenna or splitter.<br>However, under normal circumstances, E1/T1 devices are **not connected** to an LMC-64 interface, which means that these lights are **normally inactive**. |
| D | **LAN DATA**<br>The **green LAN DATA** light illuminates to indicate there is data passing through the Ethernet port.<br>**LAN LINK**<br>The **amber LAN LINK** light illuminates to indicate a connection to the LAN port. |

**Table 24: Key to LMC-64 front panel lights and controls**

## 10.2 LMC-64 rear panel connectors

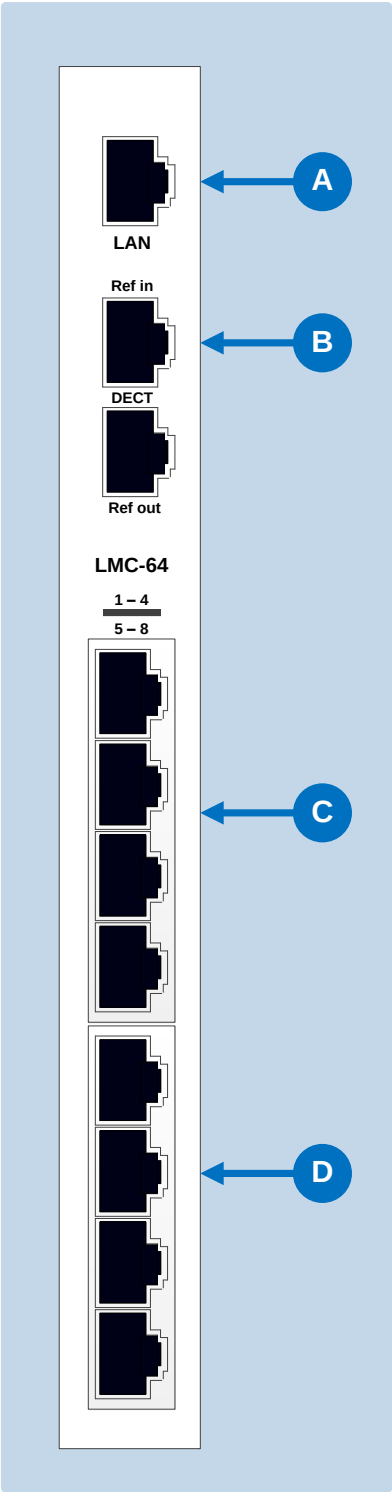


**Figure 10-2: LMC-64 rear panel connectors**

| Key to LMC-64 rear panel connectors | |
|---|---|
| **Feature** | **Description** |
| A | **LAN port (RJ-45)** |
| B | DECT sync ports:<br>**DECT Ref in (Not used)**<br>**DECT Ref out (Not used)** |
| C | **E1 / T1 Port 1 - 4 (Not used)** |
| D | **E1 / T1 Port 5 - 8(Not used)** |

**Table 25: Key to LMC-64 rear panel connectors**

**Note:** The E1/T1 and DECT ports are not used on the IVC-32 interface and should not be connected.

## 10.3 LMC-64 interface applications

The LMC-64 interface broadcasts audio level data to Production Maestro Pro clients over an IP network.

This enables multiple Production Maestro Pro clients across a network to display any audio level that is being metered.

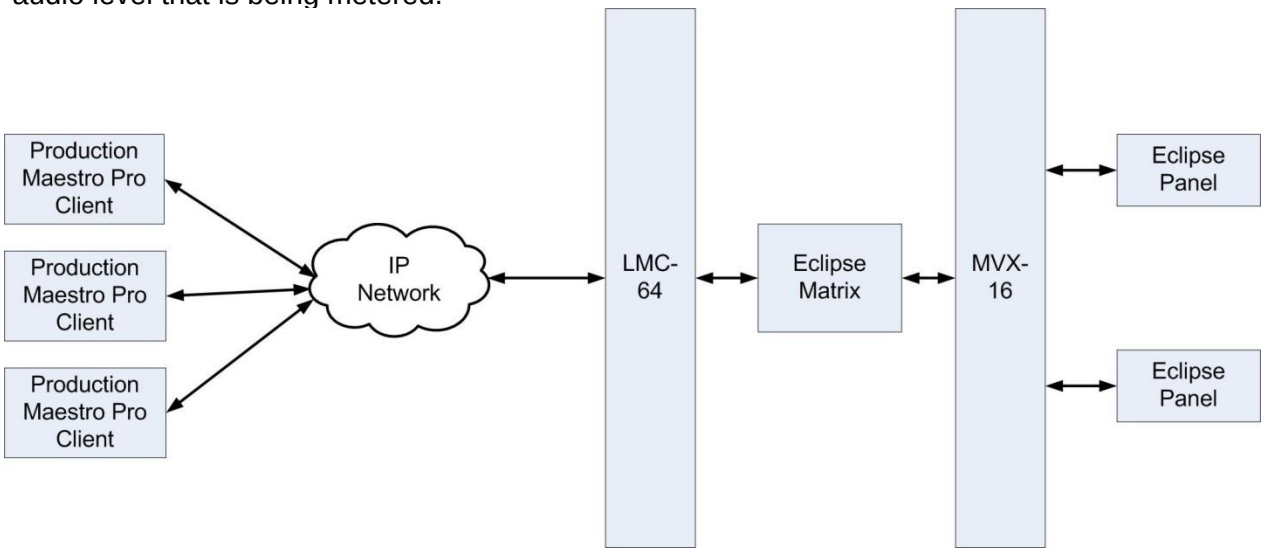


**Figure 10-3: Audio level metering with the LMC-64 interface**

# 11 Maintaining the Eclipse HX-Delta

The Eclipse HX-Delta matrix system connects a complex network of microprocessor controlled devices.
Due to the complexity of the system, field service should be limited to isolating a problem to the specific circuit board that may be causing the problem. Once the circuit board has been identified, it can be either repaired or replaced.
For an overview of the Eclipse HX-Delta, see **3 Overview** in this document**.**

*Servicing instructions are for use by qualified personnel only. To reduce the risk of electric shock, do not perform any servicing other than that described by this guide, unless qualified to do so. Refer all servicing to qualified service personnel.*

## 11.1 Routine maintenance recommendations

### 11.1.1 Cleaning the matrix

Because the matrix has moving air in it, the entire matrix should be cleaned at least once a year. To clean the matrix, shut off AC power, remove all cards, and use compressed air to remove any dust build up in the matrix itself. Clean all cards with a brush to remove dust build up.

*Care should be taken not to induce a static discharge in the cards. Use of a grounding wrist strap is recommended. If a grounding wrist strap is not available, touch an unpainted metal surface on the matrix chassis periodically to neutralize static electricity.*

### 11.1.2 Spare parts

To facilitate quick repair of the system with minimum downtime, Clear-Com recommends keeping the following spare system components in good working condition at all times:

- One CPU card.
- One CPU interface card.
- One external PSU.
- One of each type of intercom panel in the system.

- One of each type of interface in the system.
- One fan card assembly.
- One PSU card assembly.

## 11.2 Fail-Safe modes

High reliability is one of the main objectives of the Eclipse HX-Delta system design. The following features of the system minimize the effects of a component failure.

### 11.2.1 Dual power supplies

The Eclipse HX-Delta matrix includes two external power supply units. One power supply unit can power an entire matrix; the second unit provides a backup in case of an equipment failure.
In addition, the two supplies have separate IEC connectors to AC mains power, and are designed for completely automatic and transparent changeover between supplies in the event of a power failure on one of the AC branches.

*To reduce the risk of electric shock, plug each of the power cords to separate branch circuits with different service ground.*

The power supplies contain a health sensor that is connected to both an audible alarm and a warning light, giving the system operator the necessary forewarning to diagnose and correct any power anomalies while the system remains operational.
If any individual power supply fails, an alarm can be issued to a remote location to alert operators that part of a power supply has failed. The failure of a single supply will issue an alarm, but the Eclipse HX-Delta system will continue to operate normally, powered by the second supply.
The internal PSU assembly also has dual redundancy as a precaution against failure.

### 11.2.2 Hot patchability

The **front panels** of CPU cards and interface cards (not **rear panels**), and all external power supplies and fan card assembly are **hot patchable**– that is, they can be plugged in or removed from the matrix while the power is on, and they will be neither damaged, nor will they cause damage to the system.
In addition, the system smoothly incorporates a newly added card. Sometimes re-inserting a CPU card can reset the matrix. Replace CPU cards during maintenance down times if possible.

### 11.2.3 Onboard processors

If one analog port interface malfunctions, the malfunction will normally affect only the panels connected to that analog port interface. The malfunction should not affect any other cards or panels in the system. In all cases, removing a faulty card affects only the devices connected to that card.

### 11.2.4 Fail-Safe communication

In the event of a CPU card failure, the second CPU card takes over operation of the system, while the first card is repaired or replaced.

## 11.3 Troubleshooting

When attempting to identify the cause of the trouble, it is helpful to begin with the two most basic areas which cause malfunctions:

- The flow of electric current from the power supplies to the cards.
- The flow of data between the program software, the circuit cards, and the attached audio devices.

### 11.3.1 Troubleshooting power supply problems

Electric current in the matrix starts in the external power supplies and travels through the PSU internal PSU assembly to the backplane connectors, and then travels to the circuit cards themselves. When power-supply problems occur, those four areas—the power supplies, the internal PSU assembly, the backplane connectors, and the circuit cards—should be explored to identify where the trouble is occurring. Solving power-supply problems starts with identifying the specific component causing the problem.
The matrix's backplane connectors are part of the matrix's infrastructure and are not serviceable by field personnel. If it is determined that a problem is in the matrix's backplane connectors, the matrix must be returned for repair. Backplane connector malfunctions are rare, but should be considered as possibilities.

**Note:** Clear-Com may ship a spare matrix to use while the damaged matrix is being repaired depending on the support status. For more information, see your warranty and support documentation.

#### 11.3.1.1 Power supply lights on a component

A lit power-supply light on a component indicates that the matrix's electric current has traveled successfully to that component and is powering the component. For example, if the power-supply lights on the CPU card are lit, the electric current has successfully traveled from the matrix's power supplies to the CPU card.

If a power-supply light is not lit on a component, the electric current has not reached that component for some reason. Knowing where the current has stalled helps to identify the component that needs repair.
For example, if all of the power-supply lights on all cards do not light, the electricity supply may have given out either in the power supplies themselves or in the matrix's backplane connectors. A faulty connector on the backplane, or a crack in the backplane can cause all of the matrix's power-supply lights to go out because the path on which the electric current is traveling has been blocked.
This is a rare problem, but one to consider as a possibility. Repairing the problem in this case would involve determining whether the problem is in the power supplies or the backplane connectors.
When a problem is identified in the power supplies or the circuit cards, the suspect component can be replaced with a properly functioning component to see if the problem is repaired.

#### 11.3.1.2 Example power supply issues

**Problem: One or more power supply lights are unlit on one interface card**
Before repairing or replacing card, try to determine where the problem is occurring. One or both of the following actions can be tried:
**Action 1: Take the bad card out of the matrix, and insert it into a known good slot in the matrix.**
If the power supply lights still do not illuminate, the problem is probably in the card itself. Repair or replace the card.
If the power supply lights illuminate, the problem may be in the matrix's backplane connectors, which carry electric current from the power supplies to the cards. The matrix can be returned to Clear-Com for investigation or repair. In the meantime another matrix can be substituted for the damaged one.

**Note:** Clear-Com may ship a spare matrix to use while the damaged matrix is being repaired depending on the support status. For more information, see your warranty and support documentation.

**Action 2: Take a known good card, and insert it into the slot.**
If the power supply lights illuminate, the problem is probably in the card. Repair or replace the card.
If the power-supply lights do not illuminate, the problem may be in the matrix's backplane connectors, which carry electric current from the power supplies to the cards. The matrix can be returned to Clear-Com for investigation or repair. In the meantime another matrix can be substituted for the damaged one.

**Note:** Clear-Com may ship a spare matrix to use while the damaged matrix is being repaired depending on the support status. For more information, see your warranty and support documentation.

Once the problem has been isolated to the card or the backplane, it is easier to take the next step which is to repair or replace the suspect component.

**Problem: The power supply lights do not illuminate on any cards in the matrix.**

In this situation, the most probable problem is that the matrix's external power supplies or internal PSU assembly are not sending out any electric current, since none of the cards are receiving power. Although less likely, the problem may be in the matrix's backplane connectors.

**Action 1: Check the External power alarm lights or internal power alarm light/power good light. If the power alarm lights are indicating a problem with the power supply, swap it out with a new power supply.**

If this repairs the problem, the problem was in the power supply.

**Action 2: If the problem persists even after the power supply has been replaced, the problem is in the matrix's backplane connectors.**

Send the matrix back to Clear-Com for repair or replacement. In the meantime another matrix can be substituted for the damaged one.

**Note:** Clear-Com may ship a spare matrix to use while the damaged matrix is being repaired depending on the support status. For more information, see your warranty and support documentation.

**Problem: The power supply lights do not illuminate on one of the two CPU cards.**

When the system is functioning properly, the power-supply lights on both CPU cards illuminate. If the power-supply lights on a CPU card fail to illuminate, the problem may be with the card itself, or with the backplane connectors that carry the electric current from the power supplies to the cards. The backplane connectors are part of the infrastructure of the matrix and are not serviceable by field personnel.

**Action 1: Swap the CPU cards. Put the first card in the second CPU slot and the second card in the first CPU slot. The problem will follow the card or the slot.**

If the power supply lights do not illuminate on the bad card (the card with the lights out) when it is inserted in the other CPU slot, the problem is probably in the card.

If the power-supply lights on the bad card illuminate when the card is inserted in the other CPU slot, the problem is probably not in the card itself. The problem may be with the backplane connectors or power supplies.

Action 2: Check the power supplies' alarm lights. If the alarm lights are indicating a problem with the power supply, swap it out with a new power supply.

If this repairs the problem, the problem was in the power supply.

Action 3: If the problem persists even after the power supply has been replaced, the problem is in the backplane. Send the matrix back to Clear-Com for repair or replacement. In the meantime another matrix can be substituted for the damaged one.

**Note:** Clear-Com may ship a spare matrix to use while the damaged matrix is being repaired depending on the support status. For more information, see your warranty and support documentation.

**Problem: The power supply lights are out on both CPU cards.**
The problem may be with external power supplies or internal power assembly, since both cards appear not to be receiving power. Although less likely, the problem may be in the matrix's backplane connectors.
**Action 1: Check the External power alarm lights or internal power alarm light/power good light. If the alarm lights are indicating a problem with the power supply, swap it out with a new power supply.**
If this repairs the problem, the problem was in the power supply.
**Action 2: If the problem persists even after the power supply has been replaced, the problem is in the backplane.**
Send the matrix back to Clear-Com for repair or replacement. In the meantime another matrix can be substituted for the damaged one.

**Note:** Clear-Com may ship a spare matrix to use while the damaged matrix is being repaired depending on the support status. For more information, see your warranty and support documentation.

## 11.3.2 Troubleshooting data issues

The other type of problem that can occur in the system is when data is not flowing properly between the program software, the circuit cards, and the attached panels and interfaces. A troubleshooting sequence in this situation would be to first check cabling, then reset the card or panel, then reset the entire system.

### 11.3.2.1 Analog port card (MVX-A16) Reset button

Resetting the analog port interface causes the configuration information for the interface and its attached devices to reload to the interface from the CPU card's operational memory (located in its microprocessor's RAM), thus clearing up any corruption of data that may have occurred in the analog port interface microprocessor. The interface and all connected panels and interfaces momentarily stop their current activity and restart. The reset button must be pressed for more than two seconds to take effect.
If the entire system is operating except for one analog port interface, or one or more panels connected to the interface, press the reset button for that interface only.
This button is slightly recessed from the front panel to prevent it from being accidentally pressed. A tool such as a bent paper clip is required to press this button.

#### 11.3.2.2 CPU card Reset button

When the CPU card is reset by pressing its reset button, the card's non-volatile memory reloads all configuration information to the card's microprocessor. Resetting the card clears any corruption of data in the card's microprocessor. The card momentarily stops its current activity and restarts. The same system configuration that was active before the card was reset will be active after the reset.
The reset button is slightly recessed from the front panel to prevent it from being accidentally pressed. A tool such as a bent paper clip is required to press this button.

#### 11.3.2.3 CPU card Full Reset button

Press and hold the full-reset button and simultaneously press the reset button for the system to perform a cold restart. All cards in the matrix reset regardless of any system preferences in the program software. All audio devices connected to the cards, such as panels and interfaces, reset as well. When the cards and connected audio devices reset, they momentarily stop their current activity and restart. During this process configuration information is downloaded to the port cards and connected audio devices from the CPU card's microprocessor.
The same system configuration that was active before the card was reset will be active after the reset. The button must be pressed for more than two seconds for the reset to take effect.
Under normal operating conditions it is not necessary to perform a full reset. Technical personnel might perform a full restart if they believe that the CPU card is operating incorrectly as a result of corruption of the microprocessor's internal data or instruction sequence.

#### 11.3.2.4 Example data issues

**Problem:** A port light on an analog port interface does not illuminate, although there is a panel attached to that port.
**Action 1: Check the panel and the wiring leading to it.**
**Action 2: Check the Matrix Data light.** If there is no indication of matrix communication to this interface card while the other interface cards in the matrix are communicating, **reset the interface card**.

**Action 3: Replace the interface cards.**
**Action 4: Replace the panel.**
**Problem: Audio sounds low or distorted from a panel.**
**Action 1: Check the matrix's currently active CPU card's power lights.** If any of the lights are not lit, replace the card.
**Action 2: Check the analog port input and output gain settings for the port in EHX.**
**Action 3: Check the panel's listen-level adjustment settings in EHX.**

# 11.4 System block diagram

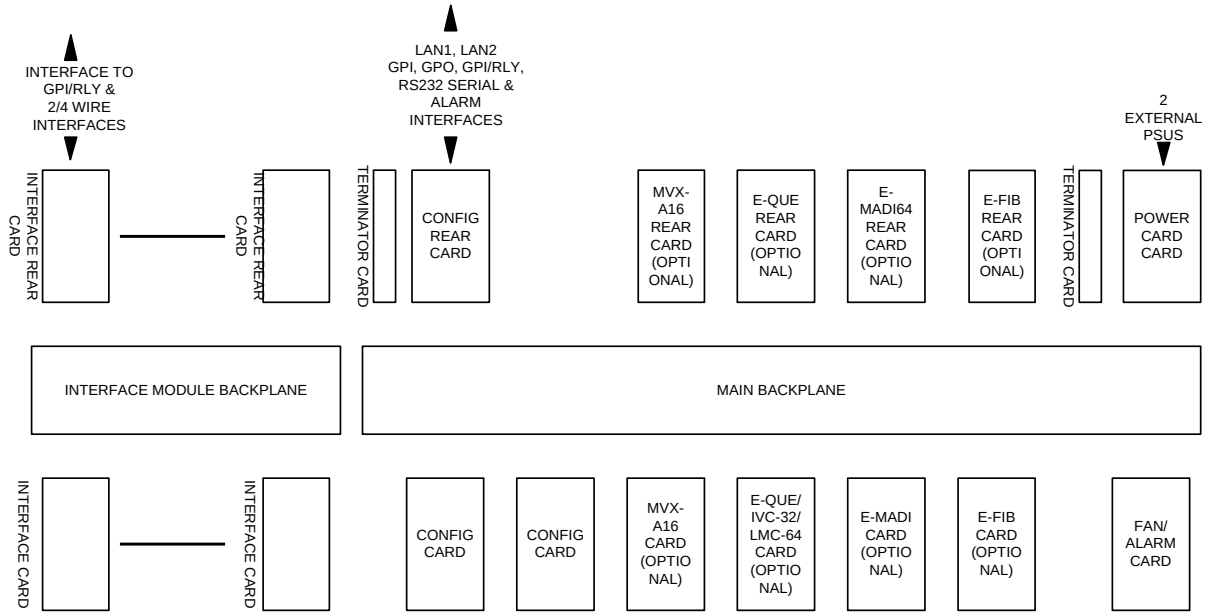


**Figure 11-1: System block diagram**

# 12 Compliance

## FCC Regulation

This device complies with Part 15 of the FCC rules. Operation is subject to the following two conditions: (1) This device may not cause harmful interference, and (2) This device must accept any interference received, including interference that may cause undesired operation.
NOTE: This equipment has been tested and found to comply with the limits for a Class A digital device, pursuant to Part 15 of the FCC rules. These limits are designed to provide reasonable protection against harmful interference when the equipment is operated in a commercial environment. This equipment generates, uses and can radiate radio frequency energy and, if not installed and used in accordance with the instruction manual, may cause harmful interference to radio communication. Operation of this equipment in a residential area is likely to cause harmful interference, in which case the user will be required to correct the interference at his own expense.
EN 55022 Warning
This is a class A product. In a domestic environment this product may cause radio interference in which case the user may be required to take adequate measures.

Industry Canada Compliance Statement
This Class A digital apparatus complies with Canadian ICES-003.

Avis de conformité à la réglementation d'Industrie Canada
Cet appareil numérique de la classe A est conforme à la norme NMB-003 du Canada.

## Korean notice

A급 기기 (업무용 방송통신기자재)

이 기기는 업무용(A급)으로 전자파적합기기로

서 판매자 또는 사용자는 이 점을 주의하시기

바라며, 가정외의 지역에서 사용하는 것을 목

적으로 합니다.

This product complies with the following specifications:
EN55022 Emissions
EN55024 Immunity
Electromagnetic Compatibility Directive 2004/108/EC
Low Voltage Directive 2006/95/EC
IEC60950-1 Warning: This is a Class A product. In a domestic environment this product may cause radio interference in which case the user may be required to take adequate measures.

# Waste Electrical And Electronic Equipment (WEEE)

The European Union (EU) WEEE Directive (2002/96/EC) places an obligation on producers (manufacturers, distributors and/or retailers) to take-back electronic products at the end of their useful life. The WEEE Directive covers most Clear-Com products being sold into the EU as of August 13, 2005. Manufacturers, distributors and retailers are obliged to finance the costs of recovery from municipal collection points, reuse, and recycling of specified percentages per the WEEE requirements.

# Instructions for Disposal of WEEE by Users in the European Union

The symbol shown below is on the product or on its packaging which indicates that this product was put on the market after August 13, 2005 and must not be disposed of with other waste. Instead, it is the user's responsibility to dispose of the user's waste equipment by handing it over to a designated collection point for the recycling of WEEE. The separate collection and recycling of waste equipment at the time of disposal will help to conserve natural resources and ensure that it is recycled in a manner that protects human health and the environment. For more information about where you can drop off your waste equipment for recycling, please contact your local authority, your household waste disposal service or the seller from whom you purchased the product.

**Figure 12-1: WEEE Symbol**

# 13 Specifications

**0 dBu** is referenced to **0.775 volts RMS.**

## 13.1 Matrix capabilities

| Category | Number / Comments |
|---|---|
| **Maximum Interface Cards** | 4 |
| **Ports per MVX-A16 Card** | 16 |
| **Maximum MVX-A16 Cards** | 4 |
| **Maximum CPU Cards** | 2 (included) |
| **Maximum Fiber Interface Cards** | 2 |
| **Maximum E-Que or IVC-32 or LMC-64 Expansion Cards** | 4 (in total) |
| **Maximum External Power Supplies** | 2 (included) |
| **Maximum RJ-45 Ports per Matrix** | 64 |
| **Maximum Timeslots** | 512 (some used for internal purposes) |

**Table 26: Matrix capabilities**

## 13.2 Mechanical

| Category | Measures / comments |
|---|---|
| **Height** | 3 RU (5.25 inches or 133.35 mm) |
| **Width** | 19 inches (482 mm) |
| **Depth** | 16.57 inches (420 mm) |
| **Weight** | 8 to 15 kg |

**Table 27: Mechanical**

## 13.3 Environmental

| Category | Measures / comments |
|---|---|
| **Operating Temperature** | 0º C to +40º C, ambient |
| **Storage Temperature** | -55º C to +70º C |
| **Humidity, Maximum** | 90% non-condensing |

**Table 28: Environmental**

## 13.4 Matrix performance

| Category | Measures / Comments |
|---|---|
| **Sample Rate** | 48 kHz |
| **Resolution** | 24 bit |
| **Frequency Response @ 48 kHz sampling** | 30 Hz – 22 kHz ± 3 dBu |
| **Crosstalk (adjacent channel)** | <–70 dBu |
| **Nominal Level** | 0 dBu |
| **Matrix headroom** | +18 dBu |
| **Distortion** | <0.05 %, @ 0 dBu, 300 Hz to 10 kHz;<br><0.1 %, @ 0 dBu, 100 Hz to 20 kHz |
| **Off Noise** | <–70 dBu (20 Hz - 22kHz) |
| **On Noise** | <–65 dBu (20 Hz - 22 kHz) |
| **Key Response, Intra-System** | <40 ms for audio route |

**Table 29: Matrix capabilities**

## 13.5 E-MADI64 interface front card

| Category | Measures / comments |
|---|---|
| **Height** | 6RU |
| **Depth** | 300 mm |
| **Operating Temperature** | 0º C to +40º C |
| **Storage Temperature** | -55º C to +70º C |
| **Humidity** | 40 - 90% non-condensing |
| **Power** | +3.3V |

**Table 30: E-MADI64 interface front card**

## 13.6 E-MADI64 interface rear card

| Category | Measures / comments |
|---|---|
| **Height** | 6RU |
| **Depth** | 58mm (max) |
| **Operating Temperature** | 0º C to +40º C |
| **Storage Temperature** | -55º C to +70º C |
| **Humidity** | 40 - 90% non-condensing |
| **Power** | +3.3V |

**Table 31: E-MADI64 interface rear card**

## 13.7 E-MADI64 fiber cable

| Category | Measures / comments |
|---|---|
| **Fiber cable** | Multimode 62.5/125µm |
| **Coaxial cable** | 75ohm |

**Table 32: E-MADI64 fiber cable**

## 13.8 E-MADI64 fiber transceiver

| Category | Measures / comments |
|---|---|
| **Type** | Multimode SFP Transceiver |
| **Wavelength** | 1310nm |
| **Connector** | Duplex LC |
| **Standard Max Node Length** | 2km (other distances (achieved using the optional single mode fiber module) are available to special order.) |

**Table 33: E-MADI64 fiber transceiver**

**Note:** The standard multimode fiber module is a **Class 1 LED Product**. The optional single mode fiber module is a **Class 1 Laser Product**.

## 13.9 E-MADI64 clock sources

| Clock type | Clock source |
|---|---|
| **Word Clock** | 44.1KHz |
| | 48KHz |
| | 96KHz |
| **SD Video** | NTSC |
| | PAL |

| | |
|---|---|
| **HD Tri-Level Sync** | 720P60 |
| | 720P59.94 |
| | 720P50 |
| | 720P30 |
| | 720P27.97 |
| | 720P25 |
| | 720P24 |
| | 720P23.98 |
| | 1080P60 |
| | 1080P59.94 |
| | 1080P50 |
| | 1080P30 |
| | 1080P29.97 |
| | 1080P25 |
| | 1080P24 |
| | 1080P23.98 |
| | 1080I30 |
| | 1080I29.97 |
| | 1080I25 |
| | 1080I24 |
| | 1080I23.98 |

**Table 34: E-MADI64 clock sources**

## 13.10 E-FIB fiber interface front card

| Category | Measures / comments |
|---|---|
| **Height** | 6RU |
| **Depth** | 300 mm |
| **Operating Temperature** | 0º C to +40º C |
| **Storage Temperature** | -55º C to +70º C |
| **Humidity** | 40 - 90% non-condensing |
| **Power** | +3.3V |

**Table 35: E-FIB Fiber interface front card**

## 13.11 E-FIB Fiber interface rear card

| Category | Measures / comments |
|---|---|
| **Height** | 6RU |
| **Depth** | 58mm (max) |
| **Operating Temperature** | 0º C to +40º C |
| **Storage Temperature** | -55º C to +70º C |
| **Humidity** | 40 - 90% non-condensing |
| **Power** | +3.3V |

Table 36: Fiber interface rear card

## 13.12 Fiber cable

| Category | Measures / comments |
|---|---|
| **Cable type** | Single Mode 9/125µ |

Table 37: Fiber interface cable

## 13.13 Fiber transceiver

| Category | Measures / comments |
|---|---|
| **Type** | SR1 Short Range SFP Transceiver Minimum Power Budget |
| **Wavelength** | 1310nm |
| **Connector** | Duplex LC |
| **Standard Max Node Length** | 10km (other distances available to special order.) |

Table 38: Fiber transceiver

## 13.14 E-QUE interface front card

| Category | Measures / comments |
|---|---|
| **Height** | 6RU |
| **Depth** | 300 mm |
| **Operating Temperature** | 0º C to +40º C |
| **Storage Temperature** | -55º C to +70º C |
| **Humidity** | 40 - 90% non-condensing |
| **Power (combined cards)** | +3.3V 3.5A<br>+5V 0.7A<br>+12V 0.05A |

Table 39: E-QUE interface front card

## 13.15 E-QUE interface rear card

| Category | Measures / comments |
|---|---|
| **Height** | 6RU |
| **Depth** | 58 mm (max) |
| **Operating Temperature** | 0º C to +40º C |
| **Storage Temperature** | -55º C to +70º C |
| **Humidity** | 40 - 90% non-condensing |

Table 40: E-QUE interface rear card

## 13.16 IVC-32 interface front card

| Category | Measures / comments |
|---|---|
| **Height** | 6RU |
| **Depth** | 300 mm |
| **Operating Temperature** | 0º C to +40º C |
| **Storage Temperature** | -55º C to +70º C |
| **Humidity** | 40 - 90% non-condensing |
| **Power (combined cards)** | +3.3V 3.5A<br>+5V 0.7A<br>+12V 0.05A |

Table 41: IVC-32 interface front card

## 13.17 IVC-32 interface rear card

| Category | Measures / comments |
|---|---|
| **Height** | 6RU |
| **Depth** | 58 mm (max) |
| **Operating Temperature** | 0º C to +40º C |
| **Storage Temperature** | -55º C to +70º C |
| **Humidity** | 40 - 90% non-condensing |

Table 42: IVC-32 interface rear card

## 13.18 LMC-64 interface front card

| Category | Measures / comments |
|---|---|
| **Height** | 6RU |
| **Depth** | 300 mm |
| **Operating Temperature** | 0º C to +40º C |
| **Storage Temperature** | -55º C to +70º C |
| **Humidity** | 40 - 90% non-condensing |
| **Power (combined cards)** | +3.3V 3.5A<br>+5V 0.7A<br>+12V 0.05A |

Table 43: LMC-64 interface front card

## 13.19 LMC-64 interface rear card

| Category | Measures / comments |
|---|---|
| **Height** | 6RU |
| **Depth** | 58 mm (max) |

| | |
|---|---|
| **Operating Temperature** | 0º C to +40º C |
| **Storage Temperature** | -55º C to +70º C |
| **Humidity** | 40 - 90% non-condensing |

**Table 44: LMC-64 interface rear card**

## 13.20 MVX-A16 analog interface card

| Category | Measures / comments |
|---|---|
| **Height** | 6 RU |
| **Depth** | 300 mm |
| **Audio Interface** | 16, bi-directional |
| **Input Format** | Balanced |
| **Output Format** | Balanced |
| **Ground Isolation** | None; expected at User Panel/Station |
| **Analog port card outputs** | |
| **Level** | 0 dBu nominal |
| **Impedance** | 100 Ohms balanced |
| **Frequency Response** | 30 Hz–22 kHz ± 3 dB |
| **Distortion** | <0.05 %, @ 0 dBu, 300 Hz to 10 kHz;<br><0.1 %, @ 0 dBu, 100 Hz to 20 kHz |
| **Analog port card inputs** | |
| **Level** | 0 dBv nominal |
| **Impedance** | 600 Ohms balanced |
| **Frequency Response** | 30 Hz–22 kHz ± 3 dB |
| **Distortion** | <0.05 %, @ 0 dBu, 300 Hz to 10 kHz;<br><0.1 %, @ 0 dBu, 100 Hz to 20 kHz |

**Table 45: Analog port card (MVX-A16)**

## 13.21 Data interface: 16 bi-directional

| Category | Measures / comments |
|---|---|
| **Input Format** | RS-422 @ 2400 to 19200 kb/s |
| **Output Format** | RS-422 @ 2400 to 19200 kb/s |
| **Input Termination** | 100 ohm ± 10% |
| **Output Termination** | None; expected at User Panel |
| **Isolation** | None; expected at User Panel |

**Table 46: Data interface: 16 bi-directional**

## 13.22 Backplane connector: FCI/BERG Metral

| Category | Measures / comments |
|---|---|
| **Port Connector** | RJ-45 to Clear-Com standard pinout |
| **Transmission Distance** | 3000 ft. (1000 m) maximum |

**Table 47: Data interface: 16 bi-directional**

## 13.23 System programming

| Category | Measures / comments |
|---|---|
| **Group Calls** | 100 |
| **Number of Grouped Ports** | 4000 maximum |
| **Conferences per Matrix** | 199 |
| **IFB per Matrix** | 100 |
| **Priority Levels** | 5 |
| **Isolates** | Any crosspoint |
| **Listen Level Control** | 0.71 dB steps |
| **Input Level Control** | 0.355 dB steps |
| **Output Level Control** | 0.355 dB steps |
| **VOX Input Detection Threshold** | 0 dB to – 45 dB adjustable |

**Table 48: System programming**

## 13.24 Minimum PC requirements (for EHX software)

| Specification | Description / Value |
|---|---|
| **Processor** | 1 GHz |
| **Memory** | 1GB RAM |
| **Hard disk** | **32 bit:**<br>1GB minimum<br>**64 bit:**<br>2GB minimum 64 bit |
| **Input devices** | CD-ROM drive |
| **Display resolution** | SVGA |
| **User entry** | Keyboard, Mouse |
| **Ports** | 2 serial ports and/or network IEEE 802.3 Ethernet card |

| | |
|---|---|
| **Network** | IEEE 802.3 Ethernet card |
| **Operating systems** | EHX 8.0 runs on the following versions of Windows:<br>• Microsoft Windows 7 (32-bit and 64-bit).<br>• Microsoft Windows 8.1 (32-bit and 64-bit)<br>• Microsoft Windows Server 2008 SP2 (32-bit and 64-bit).<br>• Microsoft Windows Server 2008 R2 (64-bit).<br>Operation on other platforms is no longer supported. |

**Table 49: Minimum PC requirements**

## 13.25 Recommended PC requirements (for EHX software)

| Specification | Description / Value |
|---|---|
| **Processor** | 2GHz or greater for a client.<br><br>As many cores as possible for a server. |
| **Memory** | **32 bit:**<br>2GB for client<br>3GB for server<br><br>**64 bit:**<br>4GB for client<br>4GB+ for server |
| **Free space** | **32 bit:**<br>1GB minimum<br><br>**64 bit:**<br>2GB minimum |

| | |
|---|---|
| **Display resolution** | 1600 x 1200 |
| **Operating systems** | EHX 8.0 runs on the following versions of Windows:<br>• Microsoft Windows 7 (32-bit and 64-bit).<br>• Microsoft Windows 8.1 (32-bit and 64-bit)<br>• Microsoft Windows Server 2008 SP2 (32-bit and 64-bit).<br>• Microsoft Windows Server 2008 R2 (64-bit).<br>Operation on other platforms is no longer supported. |

**Table 50: Recommended PC requirements**

For more information, see your EHX documentation.

## 13.26 External power supply units

| Category | Measures / comments |
|---|---|
| **Format** | Desktop |
| **Quantity** | 2 per matrix |
| **Mounting** | External |
| **AC Power Input** | IEC (1 per PSU) |
| **Input Voltage** | AC 100 V to 240 V, 50/60 Hz |
| **Power Consumption** | 150 W Maximum |
| **Status Indicators** | LEDs viewable from front of rack |

**Table 51: External power supply units**

### Notice about specifications

*While Clear-Com makes every attempt to maintain the accuracy of the information contained in its product manuals, this information is subject to change without notice.*

*Performance specifications included in this user guide are design-center specifications and are included for customer guidance only and to facilitate system installation.*

*Actual operating performance may vary.*

# 14 Glossary

| Term | Definition |
|---|---|
| **Analog Port** | Any of the Eclipse HX matrix's analog input/output RJ-45 connectors that are used to connect cable from the matrix to panels and interfaces.<br>Each port connects to a separate audio channel in the matrix. |
| **Alias label** | A label that is temporarily assigned and replaces a previously labeled port or conference. |
| **Bus** | A bus is the channel or path between the components in the matrix along which electrical signals flow to carry information from one component to the next. In the Eclipse HX matrix the bus is located in the etched surface of the midplane. |
| **Call signal** | A call signal is an electronic signal sent from one panel or interface to another. A call signal can be audible and/or visual. Typically a call signal is sent to get the attention of a panel operator who may have turned down their intercom speaker's volume or removed their headset. It can also be sent to activate an electronic relay. |
| **Canvas** | The assignment area of the Production Maestro software which can have any user labeled background. |
| **Category-5 (CAT5) cable** | EIA/TIA 568 category specification relating to network cabling. Shielded CAT5 cabling is recommended for Eclipse HX matrix wiring. |
| **CellCom®** | Digital wireless communications product. Sold under the CellCom name in the USA, and as FreeSpeak in Europe and Asia. |
| **Central matrix** | The term **central matrix** is used to differentiate the central hardware and software of the intercom system from the connected audio devices. The central matrix consists of:<br>• The metal housing for the circuit cards and power supplies.<br>• The circuit cards.<br>• The power supplies.<br>• The rear panel connectors which connect the matrix's hardware to panels and interfaces. |
| **Conference** | An internal matrix virtual partyline or busbar where many panels and interfaces can talk onto or listen from the partyline without talking to themselves. |

| | |
|---|---|
| **Destination** | A device such as an intercom panel, beltpack, or interface to which audio signals are sent. The device from which audio signals are sent is called a **source**. |
| **Duplex** | All real-time communication between individuals talking face to face is full duplex, meaning that they can both talk and listen simultaneously. The Eclipse HX matrices provide full-duplex audio. |
| **EHX** | EHX is the Eclipse HX configuration software. EHX guides the operation of the matrix circuit cards and connected panels. |
| **Ethernet** | International standard which describes how information is transmitted across a network. Provides for the efficient organization of network components. |
| **Fiber optic cable** | A fiber-optic cable consists of a glass core covered with a reflective material called **cladding** and several layers of buffer coating to protect the cable from the environment. A laser sends light pulses through the glass core to the other end of the cable. |
| **FreeSpeak®** | Digital wireless communications product. Sold under the FreeSpeak name in Europe and Asia and CellCom name in USA. |
| **FreeSpeak II™** | Digital wireless communications product. |
| **Full duplex** | Refers to transmission of signals in two directions simultaneously. |
| **Hopping** | Refers to making a trunk connection through other matrices to a destination matrix. |
| **IFB** | **Interruptible Foldback**. The term **foldback** refers to sending program audio / feed, or some other audio mix, back to announcers while they are on the air. Doing so allows announcers to monitor themselves, other announcers, videotapes of commercials, or some mix of sources, while they on the air. This is typically found in television news and live broadcast events. Announcers typically wear a small ear piece so they can hear the selected foldback audio mix. When a director wants to give directions to an announcer on air, or to announce changes in the program, the director must **interrupt** the foldback. To do this, the director uses a channel specifically set up to interrupt the foldback audio. |
| **Interface module** | A piece of electronic hardware designed to convert the four-wire signals of a central matrix port to some other form of communication, such as 2-wire partyline, telephone, etc. The interface module is connected to a |

| | |
|---|---|
| | central matrix port. The external non-four-wire device is then connected to the interface module. |
| **I-Series** | The I-Series is a family of Eclipse HX-supported user panels.<br>The series includes two display stations, two non-display stations, two expansion panels, and a level-control panel.<br>Eclipse HX also supports V-Series panels (see below). |
| **ISO** | The ISO function, short for **panel ISOlation**, allows a panel operator to call a destination and interrupt all of that destination's other audio paths and establish a private conversation. When the call is completed the destination's audio pathways are restored to their original state before the interruption. |
| **Keygroup** | KeyGroups provide a way of assigning a label to multiple panels simultaneously even within a networked matrix system. Once the KeyGroups have been defined using EHX, all the keys within a KeyGroup can be changed with a single assignment in Production Maestro (Pro mode only). |
| **Label** | A label is an alphanumeric name of up to five characters that identifies a source, destination, or control function accessed by an intercom panel. Labels appear in the displays of the intercom panel.<br>Labels can identify panels, ports interfaced to other external equipment, fixed groups, partylines, and special control functions. |
| **MADI** | Multichannel Audio Digital Interface. The MADI or AES10 electronic communications protocol defines the data format and electrical characteristics of an interface carrying multiple channels of digital audio. |
| **Multiplexing** | The process by which two or more signals are transmitted over a single communications channel. Examples include time division and wavelength division multiplexing. |
| **Non-volatile Memory** | Data stored in the CPU's firmware (ROM) that is not lost when the power is turned off. |
| **Palette** | The port, keyGroup and Monitor selection screen in Production Maestro. |
| **Panel** | Any intelligent intercom device connected to the rear-panel analog ports of the central matrix. This term does not refer to devices connected through interface modules. |

| | |
|---|---|
| **Partyline** | A wired shared communication system based on a single screened pair of wires. See the Encore range. Matrix requires the CCI-22 to interface to it. |
| **Port** | Any of the input/output connections (RJ-45 connectors) on the back panel of the central matrix. These connectors and the attached cables connect the central matrix to remote intercom devices. The term **port** emphasizes that the connection is a portal between the central matrix and the remote intercom devices. |
| **Program** | Any separate audio source that is fed into the intercom channels. In television applications, for example, the program audio is the audio that is broadcast on air. |
| **Rack Unit (RU)** | Standardized unit of mounting space on a rack panel. Each rack unit is 1.75 inches (44.45 mm) of vertical mounting space. Therefore 1 RU is 1.75 inches (44.45 mm) of vertical mounting space, 2 RU is 3.5 inches (88.9 mm), 3 RU is 5.25 inches (133.35 mm), and so on. |
| **Remote panel** | Any intelligent intercom device connected to the back-panel ports of the matrix. This term does not refer to devices connected through interfaces. |
| **Sidetone** | The sound of the panel operator's voice, as heard in their own earphone(s) as they speak. |
| **Source** | In this guide, the term source refers to a device (such as an intercom panel, interface, or beltpack) that sends audio into the matrix. The device to which audio is sent is called a destination. |
| **VOX** | In the Eclipse HX system, when audio at a panel exceeds a threshold, a light switches on at the panel's port card to visually cue the operator. The threshold level is set in the EHX configuration software. |
| **V-Series** | User panels used with Eclipse HX systems, providing advanced intercom facilities. Available in rack mount and desktop formats.<br>I-Series user panels are also supported (see above). |